Model Number

RLK61-55-Z/31/115

Retroreflective sensor

with fixed cable

Features

- Cost-optimized series for standard tasks in a special design
- Compact design
- Wide range of mounting options thanks to cubic housing design with M30 thread
- 360° high visibility LEDs
- Programmable ON-delay, OFF-delay, and One-shot timers
- Version for universal voltages
- Relay output

Product information

The Series 61 sensor family is a comprehensive product line, offering five sensing modes. Each sensor is equipped with four LEDs that are highly visible from all directions, indicating Power-On, target presence and marginal excess gain. The widely recognized, polycarbonate housing provides a IP67 protection degree rating. Color-coded labels are clearly printed on the housing to easily identify the sensing mode. DC models offer a 4-in-1 output while AC/DC models have a SPDT relay output rated to 3 A. All versions come standard with an integral multifunction timer, sensitivity adjustment and Light-ON/Dark-ON switch. Series 61 sensors are cross-talk protected and have a high degree of resistance to ambient lighting. Each sensor can be mounted via front and rear slots, rear dovetail guide or M30 x 1.5 mounting base. Additionally, cabled sensor models provide ½" - 14 NPT internal threads for use with flexible conduit.

Dimensions

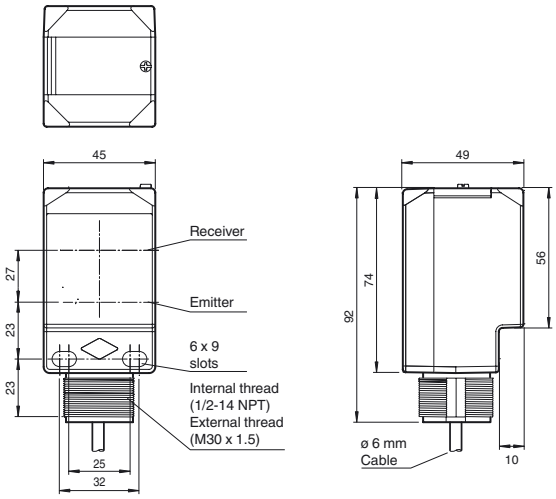

Electrical connection

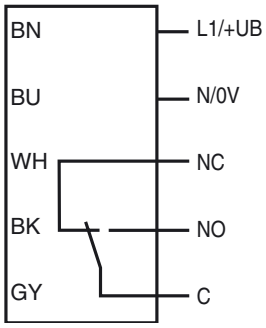

The relay-functions "NC" and "NO" bear on the switching mode "Dark-ON". This complies to the default setting of the light/dark switch (factory setting).

Indicators/operating means

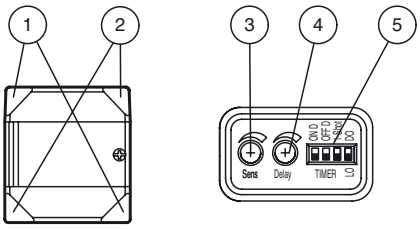

1	Operating display	green
2	Signal display	yellow
3	Sensing range adjuster	
4	Time adjuster	
5	DIP-switches	

Release date: 2013-07-10 15:15 Date of issue: 2013-07-10 911615_eng.xml

Technical data

General specifications		
Effective detection range		0 ... 18 m
Reflector distance		0.3 ... 18 m
Threshold detection range		25 m
Reference target		FE-RR1 reflector
Light source		LED
Light type		modulated visible red light , 630 nm
Diameter of the light spot		approx. 350 mm at a distance of 18 m
Angle of divergence		1.1 °
Ambient light limit		5000 Lux ; according EN 60947-5-2
Indicators/operating means		
Operating display		2 LEDs green
Function display		2 LEDs yellow on: reflector inside the sensing range off: reflector outside the sensing range
Controls		Light/Dark switch
Controls		Detection range adjuster
Controls		Time adjuster (0 ... 10 s)
Electrical specifications		
Operating voltage	U_B	24 ... 240 V AC 12 ... 240 V DC
No-load supply current	I_0	≤ 35 mA
Protection class		II , rated voltage ≤ 250 V AC with pollution degree 1-2 according to IEC 60664-1 Output circuit basis insulation of input circuit according to EN 50178, rated insulation voltage 240 V AC
Power consumption	P_0	≤ 2 VA
Output		
Switching type		light/dark on, switchable
Signal output		Relay, Form C
Switching voltage		max. 250 V AC/DC
Switching current		max. 3 A
Switching power		DC: max. 150 W AC: max. 750 VA
Switching frequency	f	20 Hz
Response time		≤ 25 ms
Timer function		DIP-switch for selection of operating modes
Ambient conditions		
Ambient temperature		-40 ... 55 °C (-40 ... 131 °F)
Storage temperature		-40 ... 70 °C (-40 ... 158 °F)
Mechanical specifications		
Protection degree		IP67
Connection		2 m fixed cable
Material		
Housing		PC (Polycarbonate)
Optical face		PMMA
Mass		240 g
Compliance with standards and directi-ves		
Standard conformity		
Product standard		EN 60947-5-2:2007 IEC 60947-5-2:2007
Approvals and certificates		
UL approval		cULus
CCC approval		Certified by China Compulsory Certification (CCC)

Curves/Diagrams

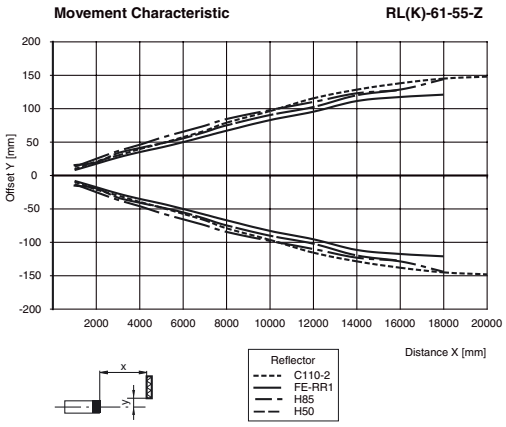

Accessories

MPZB01
Mounting bracket with vertical slots

MPZB02
Mounting bracket with circular slots

MPZB06
Ball and Swivel Mounting Bracket

MPZB07
Ball and Swivel Vertical Mounting Plate

Other suitable accessories can be found at www.pepperl-fuchs.com

Release date: 2013-07-10 15:15 Date of issue: 2013-07-10 911615_eng.xml

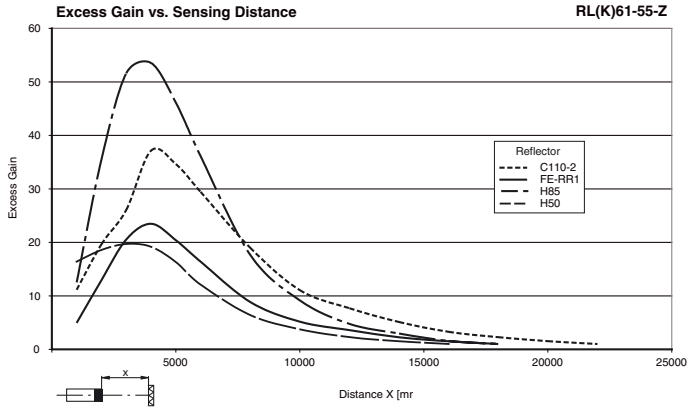

Release date: 2013-07-10 15:15 Date of issue: 2013-07-10 911615_eng.xml

Timer Functions

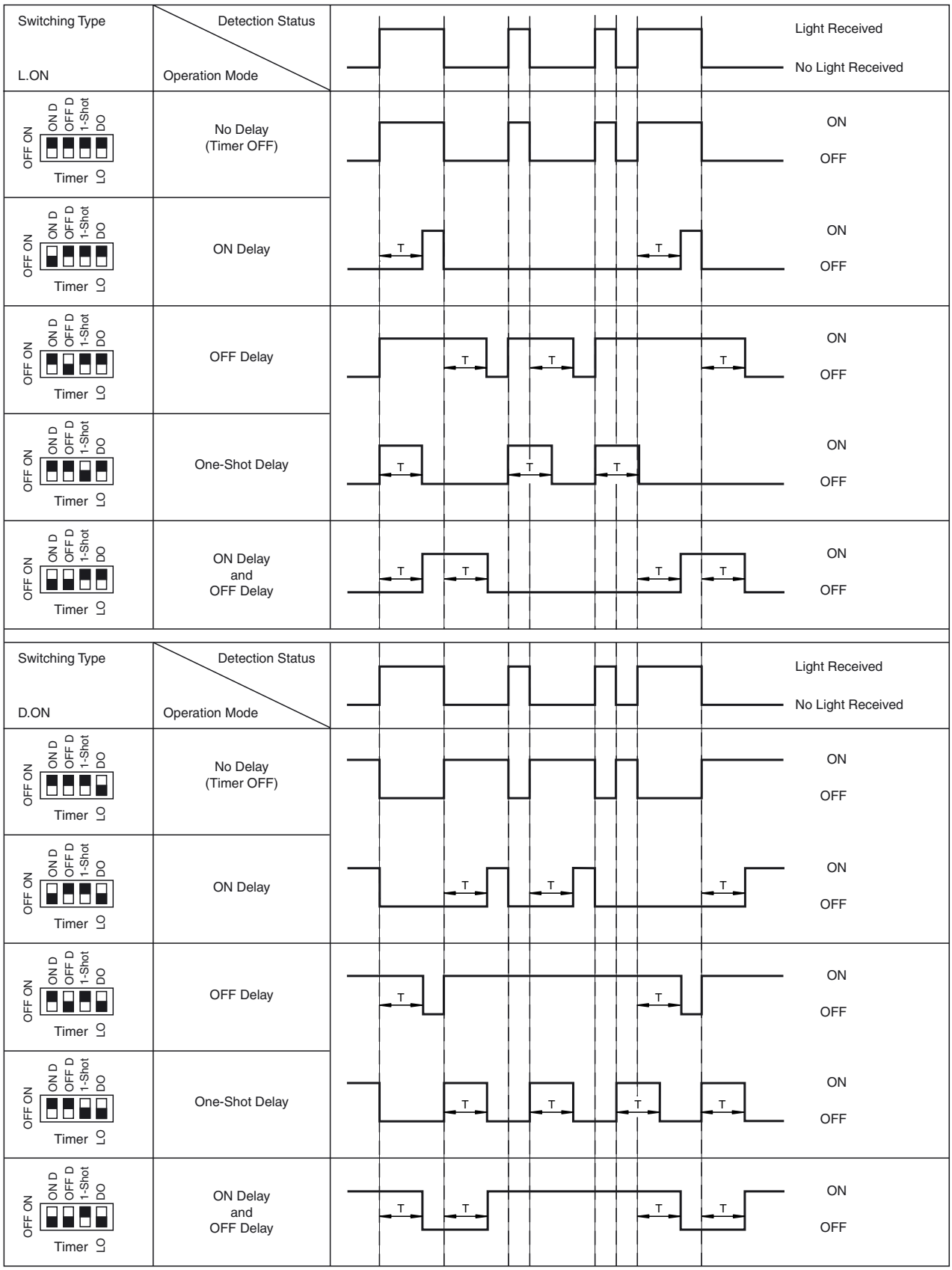

DIP-Switch position

Time (T) is adjustable from 0 to 10 sec

Release date: 2013-07-10 15:15 Date of issue: 2013-07-10 911615_eng.xml

Refer to "General Notes Relating to Pepperl+Fuchs Product Information".
Pepperl+Fuchs Group www.pepperl-fuchs.com
USA: +1 330 486 0001 fa-info@us.pepperl-fuchs.com
Germany: +49 621 776 4411 fa-info@de.pepperl-fuchs.com
Singapore: +65 6779 9091 fa-info@sg.pepperl-fuchs.com
PEPPERL+FUCHS SENSING YOUR NEEDS

Adjustment Instructions

Intended use:
The retroreflective sensor contains the emitter and receiver in a single housing. The light from transmitter is reflected back from a reflector to the receiver. If an object interrupts the light beam, the switching function is initiated.

Mounting instructions:
The sensor can be mounted using the through-holes or with a mounting bracket (not included with delivery).
The base surface must be flat to avoid distorting the sensor housing during mounting. It is advisable to secure the bolts and screws with washers so that the sensor does not become misaligned.

Adjustment Instructions:
Connect the sensor to operating voltage and the green LED lights up solid.
Mount a suitable reflector opposite the sensor and make a rough adjustment.
The precise adjustment is done by swiveling the sensor horizontally and vertically. With optimum light reception, the yellow LED lights up solid. It will blink if the sensor requires fine adjustment.

Object detection:
Move an object into the light beam. If the object is detected, the yellow LED switches off. If it does not switch off, reduce the sensitivity with the potentiometer until it does. It should light up solid when the object is removed.

Cleaning:
The yellow LED flashes if the light received decreases (e.g. dirty lenses).
We recommend that you clean the optical interfaces and check all connections at regular intervals.

Release date: 2013-07-10 15:15 Date of issue: 2013-07-10 911615_eng.xml