MICRO SWITCH
A DIVISION OF MINNEAPOLIS HONEYWELL REGULATOR COMPANY
FREEPORT, ILLINOIS

FED. MFR. CODE 91929

SWITCH — ENCLOSED

CATALOG LISTING
EXH-AR3

THIS DRAWING COVERS A PROPRIETARY ITEM AND IS THE PROPERTY OF MICRO SWITCH, A DIVISION OF HONEYWELL. THIS DRAWING IS NOT TO BE COPIED OR USED WITHOUT THE APPROVAL OF MICRO SWITCH.

M

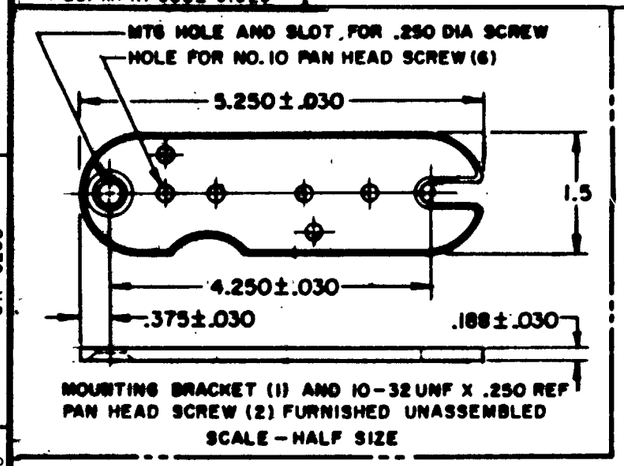

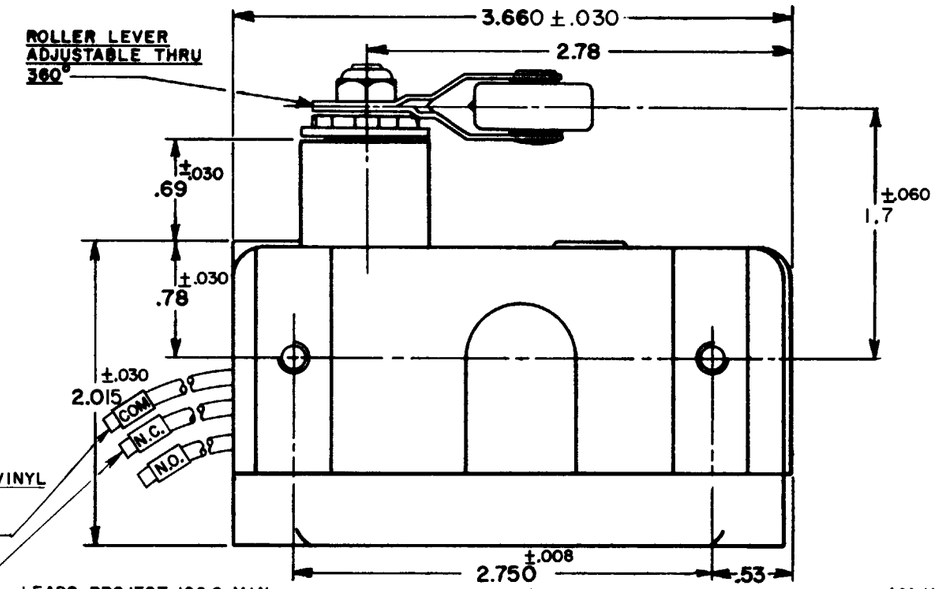

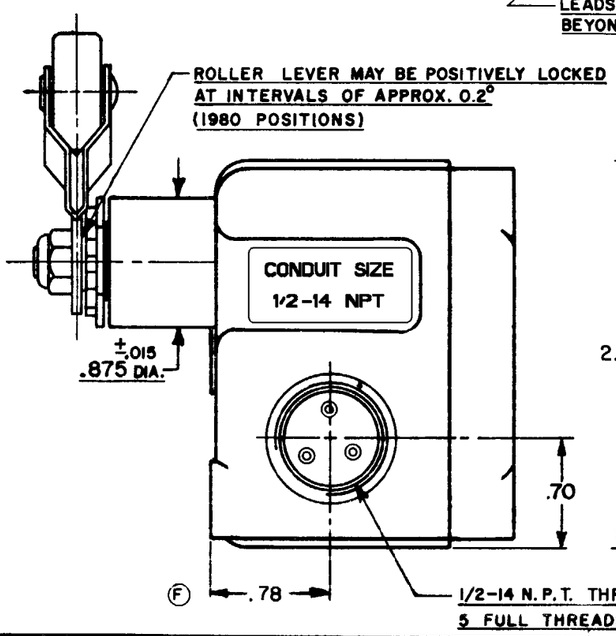

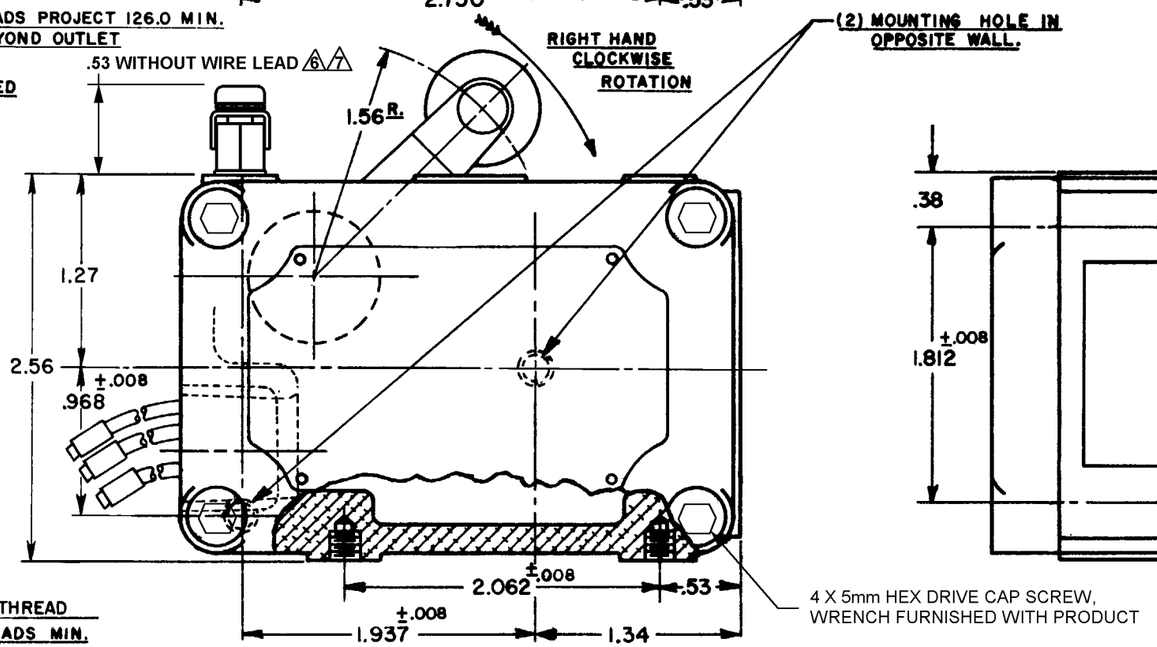

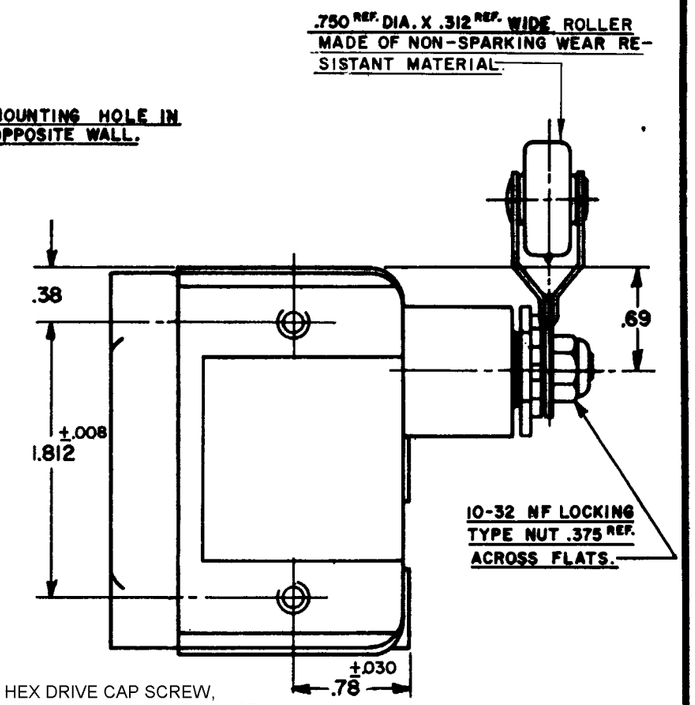

CHARACTERISTICS	
OPERATING FORCE	8-24 OZ.
RELEASE FORCE	4 OZ. MIN.
PRETRAVEL	8° (.219 MAX.)
(A) DIFFERENTIAL TRAVEL	.025 MAX.
DO NOT OVERTRAVEL MORE THAN	25°
SWITCH - BASIC REPLACEMENT	4HS202

ELECTRICAL DATA

CONTACT ARRANGEMENT: S. P. D. T.

LINE VOLTAGE	INDUCTIVE LOAD	RESISTIVE LOAD
28 VDC (SEA LEVEL-100,000 FT)	10 AMP	25 AMP
125 VAC (SEA LEVEL-70,000 FT)	1 AMP	1 AMP

UL L22 1 AMP 125 VAC

SCALE FULL

DO NOT SCALE PRINT

UNLESS OTHERWISE SPECIFIED DIMENSIONS ARE IN INCHES

TOLERANCES ARE:

ONE PLACE	(.0)	±.030
TWO PLACE	(.00)	±.015
THREE PLACE	(.000)	±.005
ANGLES		±

WEIGHT

NOTE-

1 - (8) MOUNTING SCREW HOLES, 10-32 NF-2B THREADS X .219 REF. DEEP.
2 - LEADS APPROPRIATELY MARKED FOR CIRCUIT IDENTIFICATION.
(E) (A) 3 - EXPLOSION PROOF - UNDERWRITERS' LAB. INC. LISTED FOR HAZARDOUS LOCATIONS NEMA 7, CLASS I, GROUPS B,C AND D, NEMA 9, CLASS II, GROUPS E, F AND G.
4 - EUROPEAN HAZARDOUS LOCATIONS DESIGNATION: Ex dIIB + H2 T6 CATAGORY II 2 G
5 - SEAL RATING : NEMA 1
6 - EXTERNAL GROUND SCREW MAY BE ASSEMBLED TO ANY UNUSED MOUNTING SCREW HOLE
7 - ASSEMBLE PROVIDED SPLIT LOCKWASHER BETWEEN GROUND LUG AND HOUSING

EXH-AR3 | M | DRAWING NUMBER | REPLACES | RELEASE NO. SR-6285 | 03DEC09 | CMH | CHECK | 22 MAR 57 | 9 APR 57 | CHECK | 27 APR 05 | AK | CHECK | 19 MAR. 57 | DRAWN R.E.R.

ISSUE: X 17

REVISIONS

A	CO 12059	K.F.M. 9 SEPT. 57
B	C015608	M B F 10 FEB 61
D	C016105	L S D 16 NOV 61
E	C017960	L E B 28 MAR 63
F	CO 18787	M B F 7 MAY 64
G	CO 18276	M B F 19 JUNE 64
H	C019878	R E R 27 OCT 66
J	C026103	D L F 18 JUL 69
K	C027560	M B S 5 FEB 71
L	C031559	D B W 23 MAY 73
M	CO 58360	CSH 9 NOV 85
N	C061381	DAW 23 APR 87
P	C073019	MAM 19 SEP 92
R	0012750	DVM 27 APR 05
T	0017245	KRB 28 NOV 05
U	0059237	LK 03DEC09

74-863

RASTER