MICRO SWITCH
A DIVISION OF MINNEAPOLIS-HONEYWELL REGULATOR COMPANY
FREEPORT, ILLINOIS
FED. MFR. CODE 91929

SWITCH-ENCLOSED

EX-Q ★

M

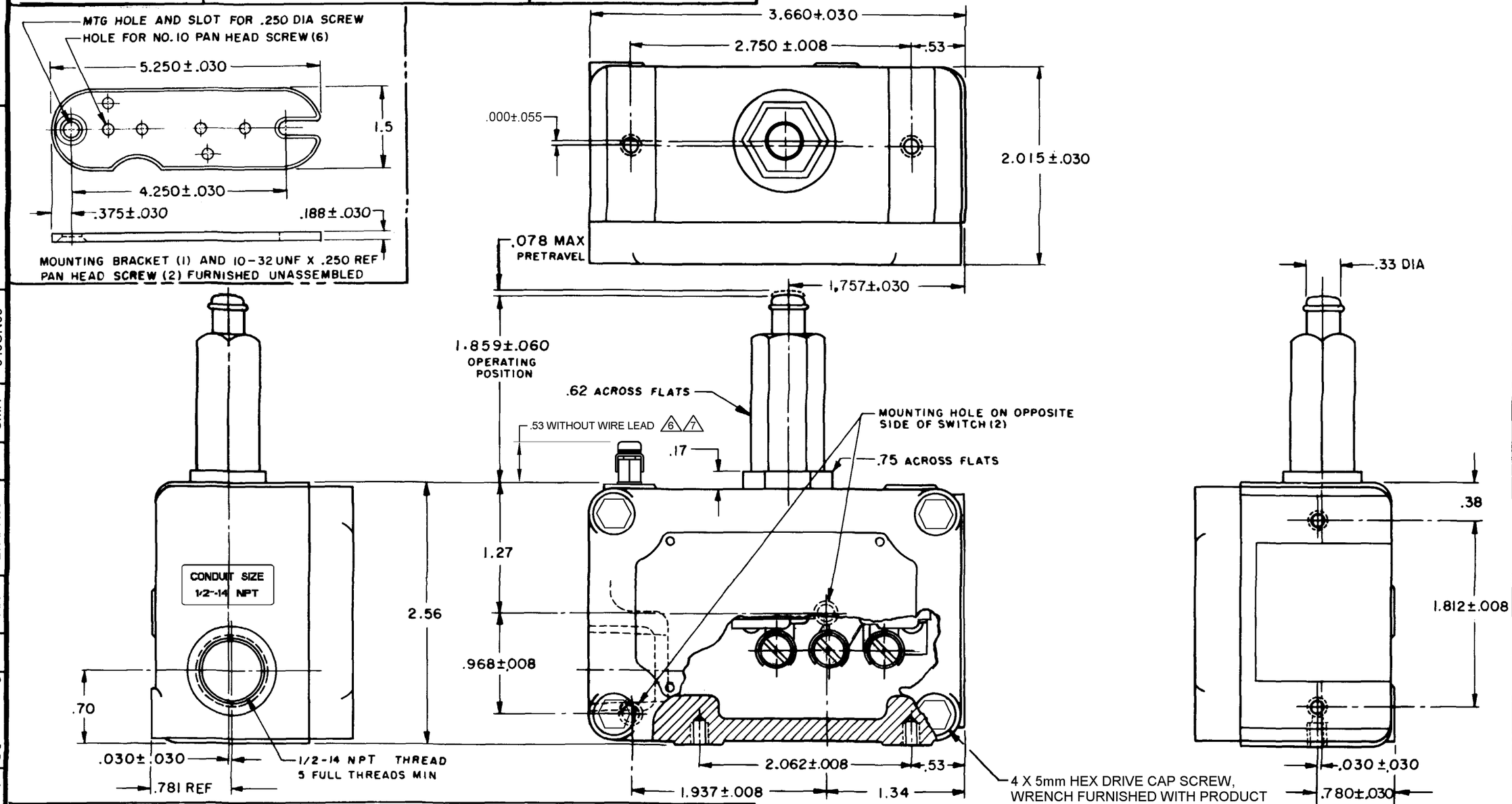

THIS DRAWING COVERS A PROPRIETARY ITEM AND IS THE PROPERTY OF MICRO SWITCH, A DIVISION OF MINNEAPOLIS-HONEYWELL REGULATOR CO. THIS DRAWING IS NOT TO BE COPIED OR USED WITHOUT THE APPROVAL OF MICRO SWITCH.

CHARACTERISTICS	ELECTRICAL DATA	SCALE FULL
OPERATING FORCE — — — — 3 LB MAX	CONTACT ARRANGEMENT S P D T	DO NOT SCALE PRINT
RELEASE FORCE — — — — 3/4 LB MIN	-L96- 15A-125, 250, OR 480 VAC; 1/2 A-125 VDC; 1/4 A-250 VDC; 1/8 HP-125 VAC; 1/4 HP-250 VAC	UNLESS OTHERWISE SPECIFIED DIMENSIONS ARE IN INCHES
DIFFERENTIAL TRAVEL — — .004 MAX		TOLERANCES ARE: ONE PLACE (.0) ±.030; TWO PLACE (.00) ±.015; THREE PLACE (.000) ±.005; ANGLES ±.5°
OVERTRAVEL — — — — — .188 MIN		
SWITCH-BASIC REPLACEMENT-BZ-2R-P4		WEIGHT

NOTE
1 - MOUNTING SCREW HOLE 10-32 UNF THREAD X .219 REF DEEP (8)
2 - 8-32 UNC X .219 REF TERMINAL SCREWS AND CUPWASHERS
3 - EXPLOSION PROOF - UNDERWRITER'S LAB INC. LISTED RATING FOR HAZARDOUS LOCATIONS NEMA 7, CLASS I, GROUPS C AND D, NEMA 9, CLASS II, GROUPS E, F AND G
4 - EUROPEAN HAZARDOUS LOCATIONS DESIGNATION: Ex d IIB + H2 T6 CATAGORY II 2 G
5 - SEAL RATING: NEMA 1
6 EXTERNAL GROUND SCREW MAY BE ASSEMBLED TO ANY UNUSED MOUNTING SCREW HOLE
7 ASSEMBLE PROVIDED SPLIT LOCKWASHER BETWEEN GROUND LUG AND HOUSING

RASTER

EX-Q ★ | REPLACES | RELEASE NO. M | DRAWING NUMBER 27 | 04JUN09 | ISSUE 26 | CMH | CHECK | 27APR05 | AK | CHECK | 28 OCT 66 | LSD | CHECK | 27 OCT 66 | MBF | DRAWN

REVISIONS
A C019876 MBF 27 OCT 66
B C026103 DLF 18 JUL 69
C CO-31559 BEN 10 JUL 73
D CO 53779 A SLB 26 AUG 83
E CO 58360 CSH 9 NOV 85
F C061381 DAW 22 APR 87
G CO 70715B TSM 10 OCT 91
H C073019 MAM 19 SEP 92
J 0012750 NM 09MAY05
H 0052827 KNR 04JUN09

FO-50378-003