FO-55111-C

HONEYWELL PART NUMBER
DTV6-2RN

REV	DOCUMENT	CHANGED BY		CHECK
15	0081896	NMN	21SEP11	CMH

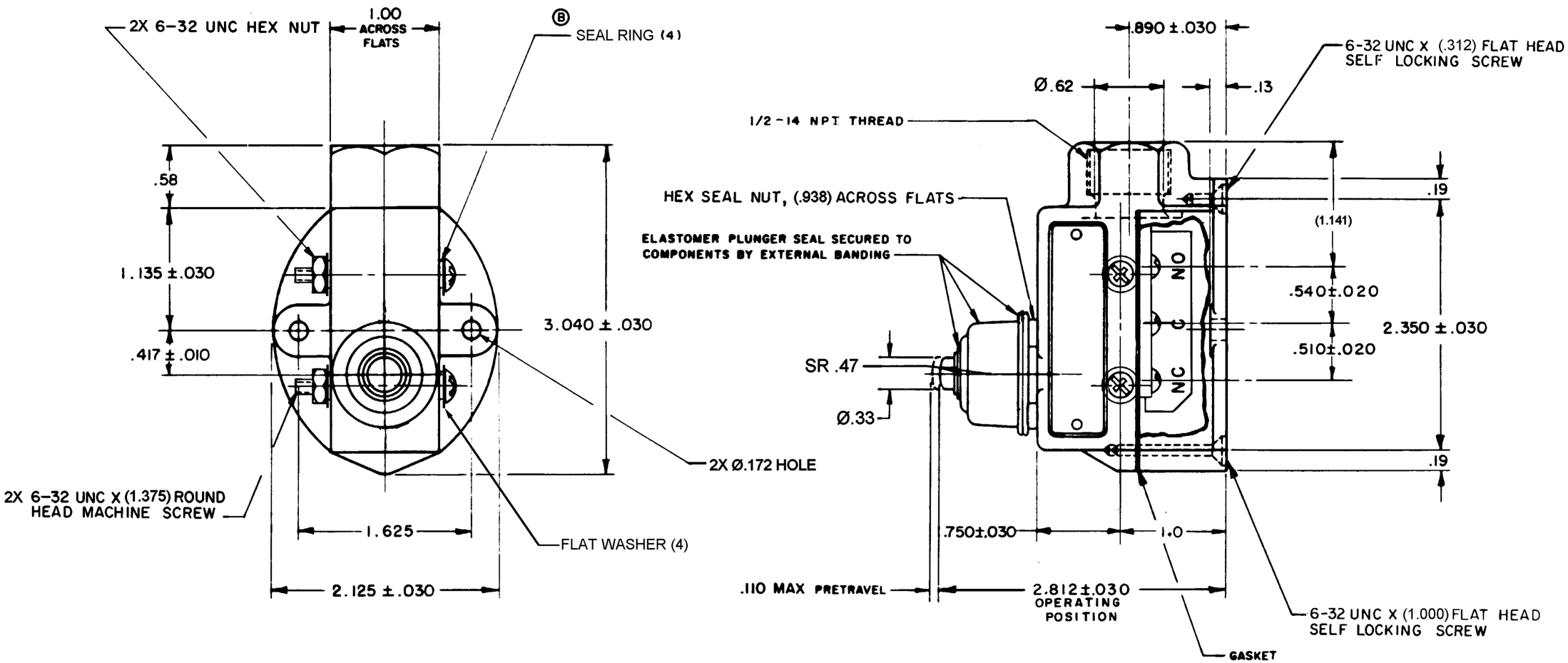

NOTES

1 - 3X 4-40 UNC X (.125) TERMINAL SCREW AND LOCK WASHER
2 - SEALED FOR NEMA 1, 3, 4 AND IP 66 RATING

CHARACTERISTICS	
OPERATING FORCE	26-59 OZ
DIFFERENTIAL TRAVEL	.060 MAX
OVERTRAVEL	.125 MIN
SWITC-BASIC REPLACEMENT	DT-2R3-A7

ELECTRICAL DATA	
CONTACT ARRANGEMENT	S P D T
CODE L59	10A - 125 OR 250VAC 0.3A - 125 VDC; 0.15A - 250 VDC
CE 1.5A, 240VAC	

DESIGN UNITS: INCH
TOLERANCES UNLESS NOTED:

NO PLACES	X	±	
ONE PLACE	.X	±	.030
TWO PLACE	.XX	±	.015
THREE PLACE	.XXX	±	.005
ANGLES	X	±	0°

THIRD ANGLE PROJECTION

DRAWN	MBF	10OCT63
CHECK	DAW	08NOV63

THIS DRAWING COVERS A PROPRIETARY ITEM AND IS THE PROPERTY OF HONEYWELL. THIS DRAWING IS NOT TO BE COPIED OR USED WITHOUT THE PERMISSION OF HONEYWELL.

INTERPRET PER ANSI Y14.5M-1982 OTHER HONEYWELL ENGINEERING STANDARDS MAY APPLY

RASTER

Honeywell

TITLE SWITCH - ENCLOSED

SIZE	TYPE	CAGE CODE	DRAWING NAME	REV
B	I	-	DTV6-2RN	15

SCALE NONE | WEIGHT .62 LB | SHEET 1 OF 1