MICRO SWITCH
FREEPORT, ILLINOIS, U.S.A.
A DIVISION OF HONEYWELL
FED. MFG. CODE 91929

SWITCH—ENCLOSED

CATALOG LISTING
BZE6-2RN72

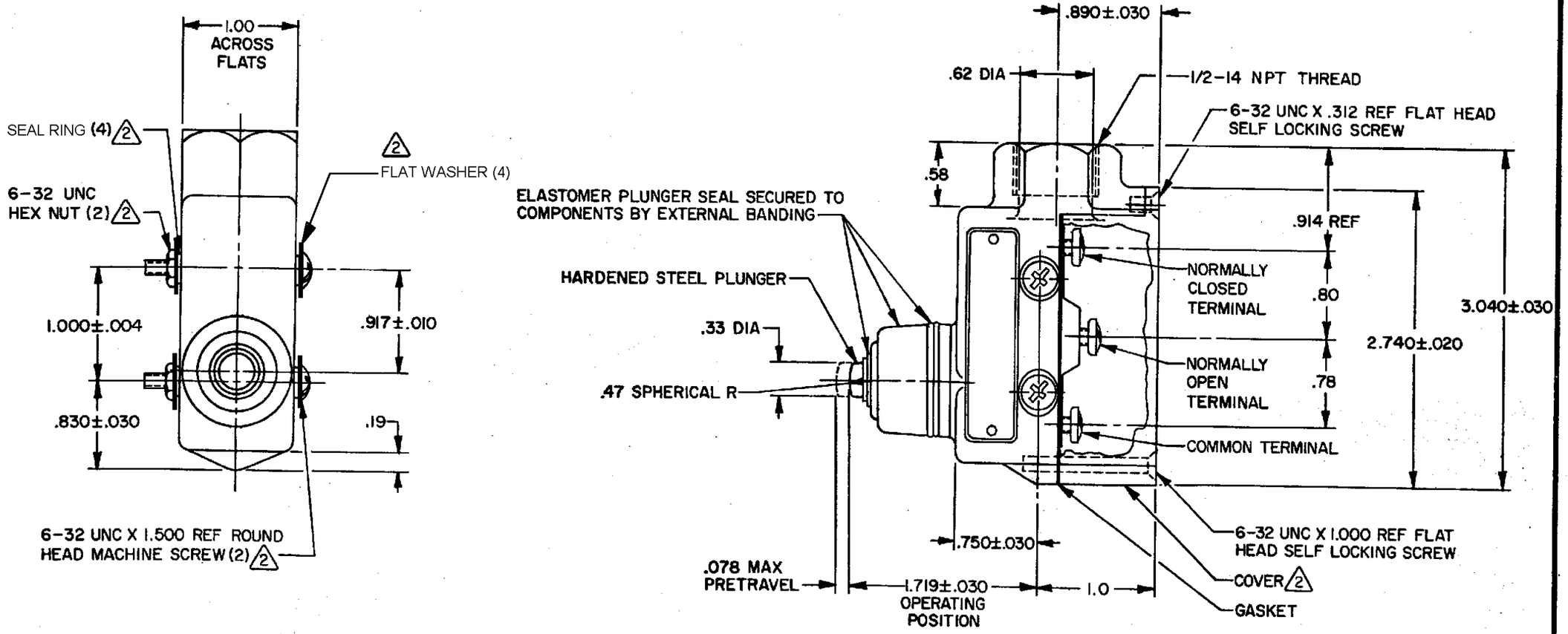

NOTES—

1 2 — 6-32 UNC X .219 REF BINDING HEAD TERMINAL SCREW AND CUPWASHER (3) FURNISHED UNASSEMBLED

3 - SEAL RATING: NEMA1,3
IP54

THIS DRAWING COVERS A PROPRIETARY ITEM AND IS THE PROPERTY OF MICRO SWITCH, A DIVISION OF HONEYWELL. THIS DRAWING IS NOT TO BE COPIED OR USED WITHOUT THE APPROVAL OF MICRO SWITCH.

CHARACTERISTICS	ELECTRICAL DATA	
OPERATING FORCE — — — — — — — 9-24 OZ	CONTACT ARRANGEMENT S P D T	SCALE FULL
RELEASE FORCE — — — — — — — 4 OZ MIN		DO NOT SCALE PRINT
DIFFERENTIAL TRAVEL — — — — .002 MAX	CODE L22 1A-125 VAC	UNLESS OTHERWISE NOTED DIMENSIONS ARE IN INCHES
OVERTRAVEL — — — — — — — — .219 MIN	CE 1.5A, 240Vac	TOLERANCES ARE: ONE PLACE (.0) ±.030; TWO PLACE (.00) ±.015; THREE PLACE (.000) ±.005; ANGLES ±2°
BASIC SWITCH REPLACEMENT — — BZ-2RQ7722		WEIGHT .56 LB

REPLACES			
RELEASE NO.			
DRAWING NUMBER	M	BZE6-2RN72	
ISSUE	10	22NOV05	BP

REVISIONS			
A	CO-38200	SLB 24 AUG 77	
B	C053191-G	CJH 2 MAY 84	25 AUG 77
C	C055989	JAP 8 NOV 84	ROB
D	C054958	GJW 8 JAN 85	CHECK
E	C072476	MAW 4 SEP 92	77
F	CO-77364	GLH 16 AUG 94	AUG
G	0017057	VKR 22NOV05	25

CHECK KPK

DRAWN SLB 24 AUG 77

FO-52851-A