MICRO SWITCH
a Honeywell Division
FED.MFG.CODE 91929

SWITCH – BASIC

CATALOG LISTING
BZ–3RW80155551–D6–S

WHEN SEARCHING FOR THIS CATALOG LISTING WITHIN HONEYWELL'S INTERNAL SAP SYSTEM, THE LISTING MUST BE ENTERED WITHOUT DASHES (BZ3RW80155551D6S) DUE TO CHARACTER LIMITATIONS IMPOSED BY THE SYSTEM

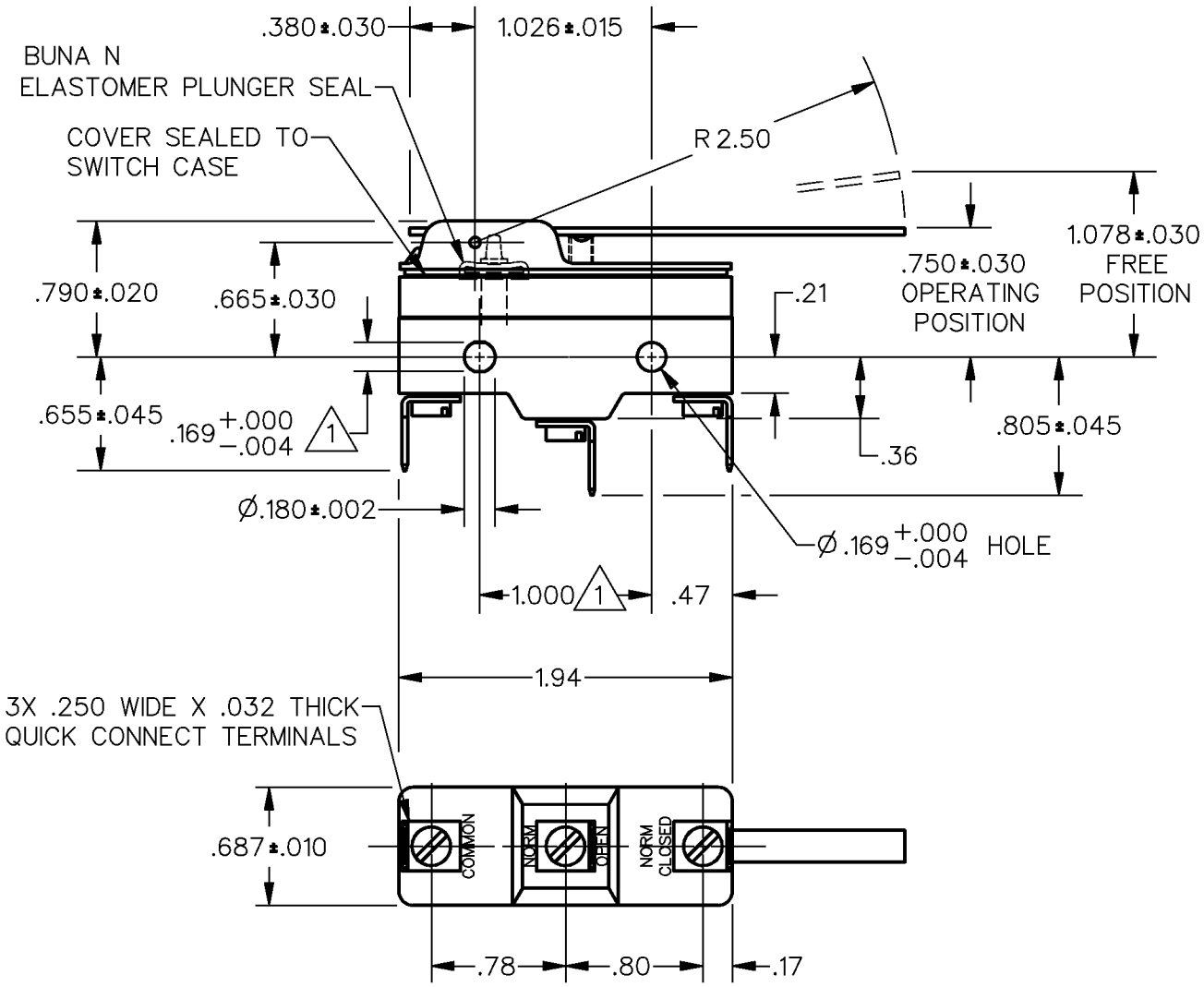

NOTES
1. MOUNTING HOLES WILL ACCEPT PINS OR SCREWS OF Ø.165 MAX ON 1.000±.002 CENTERS
2 – SEALED CONSTRUCTION PROVIDES SPLASH RESISTANCE

ANSI Y14.5M–1982 APPLIES

THIS DRAWING COVERS A PROPRIETARY ITEM AND IS THE PROPERTY OF MICRO SWITCH, A DIVISION OF HONEYWELL. THIS DRAWING IS NOT TO BE COPIED OR USED WITHOUT THE APPROVAL OF MICRO SWITCH.

THIRD ANGLE PROJECTION

CHARACTERISTICS	ELECTRICAL DATA	SCALE NONE — DO NOT SCALE PRINT
OPERATING FORCE — — — — 3 OZ MAX	CONTACT ARRANGEMENT	UNLESS OTHERWISE SPECIFIED TOLERANCES ARE
RELEASE FORCE — — — — 1/2 OZ MIN	L9	ONE PLACE (.0) ±.030
DIFFERENTIAL TRAVEL — — — .015–.075	10A 125, 250 OR 480 VAC	TWO PLACE (.00) ±.015
OVERTRAVEL — — — — — — .219 MIN	1/2A 125 VDC, 1/4A 250 VDC	THREE PLACE (.000) ±.005
	L288	ANGLES ±
		WEIGHT .076 LB

CATALOG LISTING BZ–3RW80155551–D6–S
PAGE 1 OF 1
ISSUE 3 M
REPLACES X100802–BZ
RELEASE NO. PR–22571

REVISIONS		
A	C093346	DLT 17 AUG 98
B	0046794	KNR 11 DEC 08

DRAWN	KDR	19 FEB 97	
CHECK	MAM	20 FEB 97	
CHECK	RS	11 DEC 08	
CHECK			
RASTER			