MICRO SWITCH
FREEPORT ILLINOIS U S A
A DIVISION OF HONEYWELL
FED. MFG. CODE 81929

SWITCH–ENCLOSED

CATALOG LISTING
84CX SERIES
CHART 1

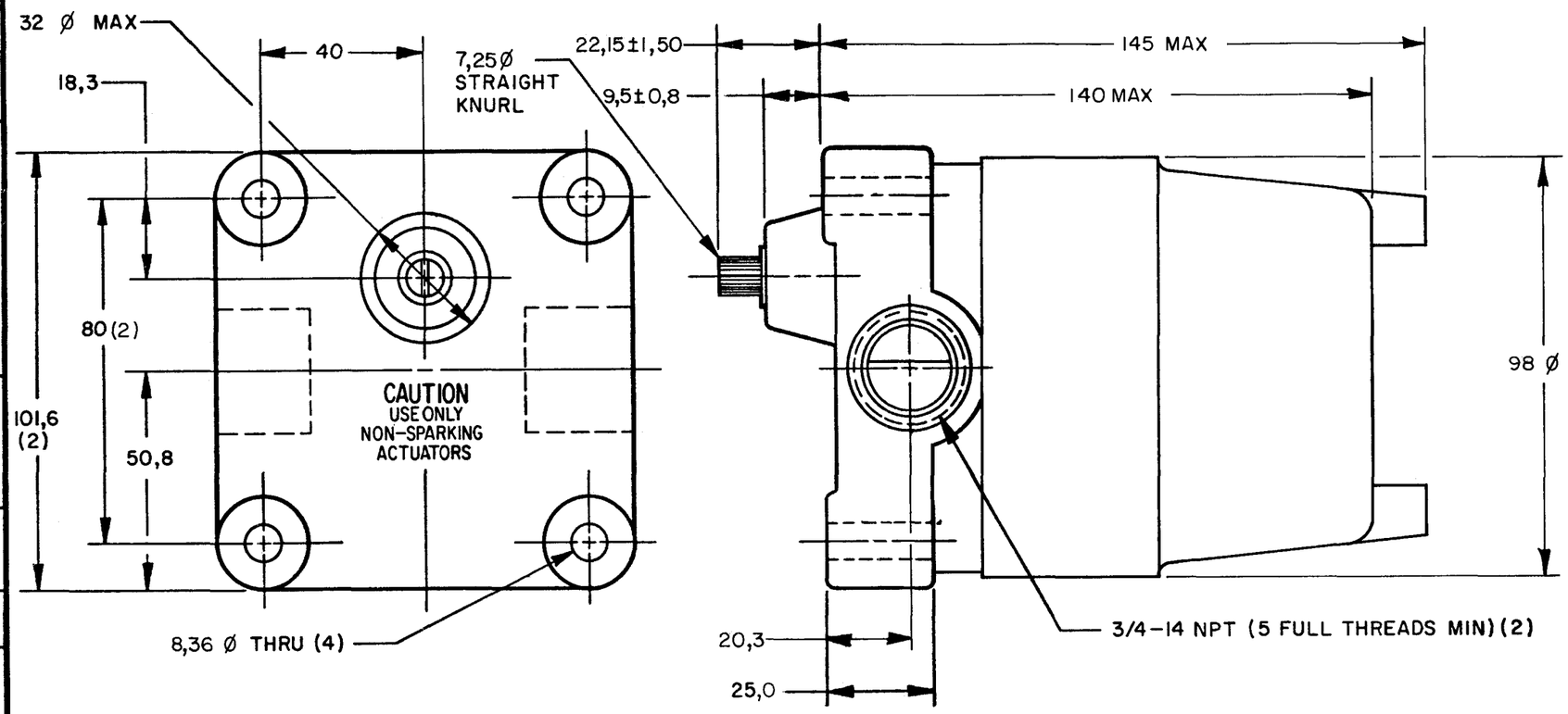

CONVERSION CHART	
4,75	.187
7,25	.285
8,36	.33
9,5±0,8	.370±.032
18,3	.72
20,3	.80
22,15±1,50	.870±.059
25,0	.98
32,0	1.26
40,0	1.57
50,8	2.00
80,0	3.15
98,0	3.86
101,6	4.00
140,0	5.51
145,0	5.71
1,25 Nm	.922 PF
0,113 Nm	.083 PF
4,0 Kg	8.82 LB

NOTES
1 - EXPLOSION PROOF-UNDERWRITERS LAB INC LISTING FOR HAZARDOUS LOCATIONS CLASS I, GROUPS B, C, AND D; CLASS II, GROUPS E., F AND G
2 - BRONZE ENCLOSURE
3 - 6-32 UNC X 4,75 REF PAN HEAD TERMINAL SCREW (6 PER BASIC)
4 - CAMS MAY BE REPOSITIONED IN 7°20' INCREMENTS
5 - FOR USE IN TEMPERATURES UP TO 85°C
6 SEE (M) 7CX CHART 3 FOR LEVER ACTUATORS

CAT. LIST.	DESCRIPTION	ELECTRICAL DATA
84CX2	2 BASICS; EACH OPERATES CW AND CCW	UL LISTED – FILE E14274 10A–125 OR 250 VAC CODE L59 0.3A–125 VDC; 0.15A–250 VDC
(K)	1 BASIC; OPERATES CW AND CCW	

THIS DRAWING COVERS A PROPRIETARY ITEM AND IS THE PROPERTY OF MICRO SWITCH, A DIVISION OF HONEYWELL. THIS DRAWING IS NOT TO BE COPIED OR USED WITHOUT THE APPROVAL OF MICRO SWITCH.

THIRD ANGLE PROJECTION

SCALE 3/4 TO 1

DO NOT SCALE PRINT

TOLERANCES
APPLY TO DESIGN UNITS. CONVERSIONS ARE ONLY FOR REFERENCE. UNLESS NOTED, TOLERANCES ARE ±

	DIM. mm	TOL. mm/in	DIM. in	TOL. mm/in
NO PLACES	X	1/.04		
ONE PLACE	X,X	0,4/.016	X.X	0,8/.03
TWO PLACES	X,XX	0,15/.006	X.XX	0,38/.015
THREE PLACES			X.XXX	0,13/.005
ANGLES				

SI METRIC — US CUSTOMARY
DESIGN UNITS ■ ☐

RAW MATERIAL–COMMERCIAL STANDARD
MICRO SWITCH STANDARDS APPLY
DIMENSIONS ARE TO BE MET BEFORE PROTECTIVE COATINGS ARE APPLIED

WEIGHT 4,0 Kg APPROX

CHARACTERISTICS

OPERATING FORCE	1,25 Nm MAX
RELEASE FORCE	0,113 Nm MIN
PRETRAVEL	30° MAX
DIFFERENTIAL TRAVEL	25° MAX
OVERTRAVEL	75° MIN

CONTACT ARRANGEMENT
DPDT
(EACH BASIC)

84CX SERIES CHART 1
M
DRAWING NUMBER
11
ISSUE
REPLACES
RELEASE NO. PR-7466
CHECK

REVISIONS
A CO 47593 D J S 3 APR 80
B PR-10625 J A P 12 OCT 81
C PR10676 S L B 29 OCT 81
D CO 53444 WJM 23 JAN 84
E C057575 JAS 1 JULY 85
F C058369 KEW 20 NOV 85
G CO 61401 DAW 16 APR 87
H C061899 CJP 27 JUL 87
J C077459 KEU 7 JUN 94
K CO-91491 CSL 3 FEB 98

DRAWN CEB 28 OCT 78
CHECK 9 JUL 78
CHECK 2 NOV 78

FORMTEK