MICRO SWITCH
a Honeywell Division
FED. MFG. CODE 91929

ASSEMBLY- TOGGLE SWITCH

CATALOG LISTING
64AT34 SERIES
CHART 1

CATALOG LISTING	KEYWAY POSITION		CENTER POSITION		OPPOSITE KEYWAY POSITION	
	C-NC	C-NO	C-NO	C-NC	C-NC	C-NO
64AT34-1	1 & 2	3 & 4	NONE	ALL	3 & 4	1 & 2
64AT34-3	1 & 2	3 & 4	NONE	NONE	3 & 4	1 & 2
64AT34-5	1 & 2*	3 & 4*	NONE	ALL	3 & 4	1 & 2
64AT34-7	1 & 2*	3 & 4*	NONE	ALL	3 & 4*	1 & 2*
64AT34-514	1 & 2	3 & 4	NONE	ALL	3 & 4*	1 & 2*
* ASTERISK DENOTES MOMENTARY POSITION						

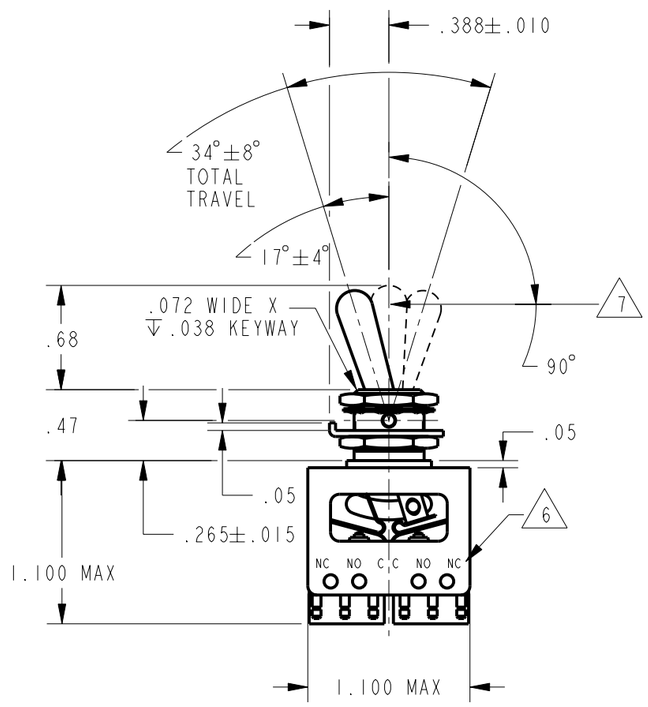

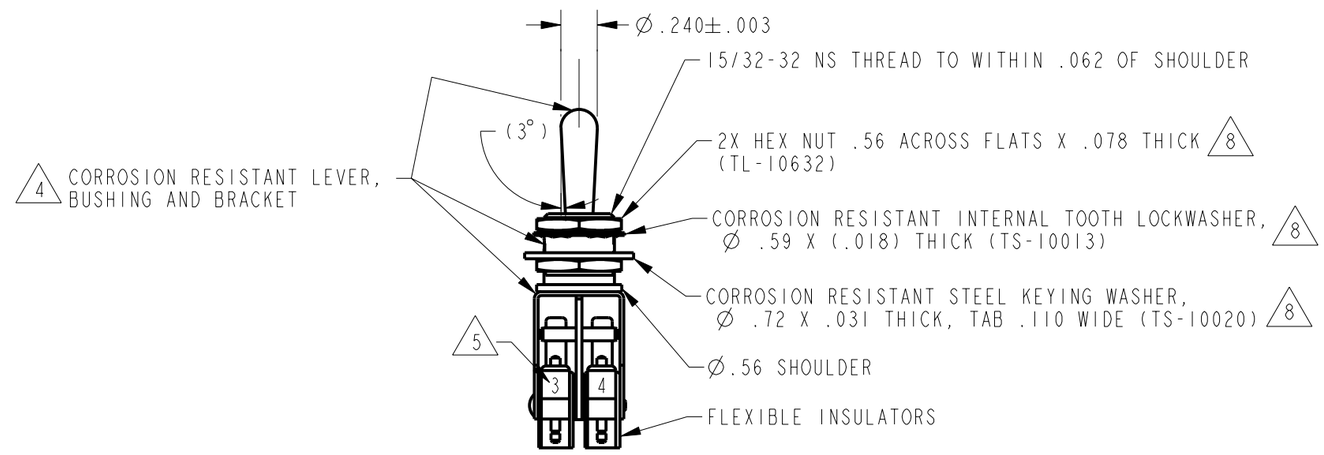

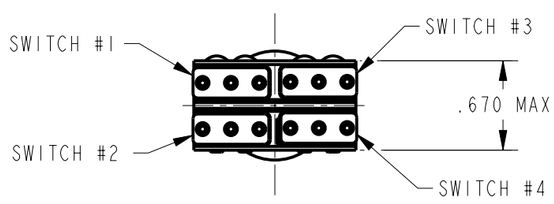

NOTES
1 - UNIT INCLUDES 4X 24K SOLID GOLD CONTACT "23SX" TYPE BASIC SWITCH (MEETS REQUIREMENTS OF MIL-PRF-8805)
2 - SWITCHES DO NOT NECESSARILY OPERATE SIMULTANEOUSLY
3 - PLATED TERMINALS WILL ACCEPT AMPS INC Ø.058 PIN RECEPTACLES
4 DULL FINISH ON LEVER AND BUSHING
5 SWITCH NUMBERS STAMPED ON END OF BASIC SWITCHES
6 TERMINAL DESIGNATION STAMPED ON BOTH SIDES OF UNIT
7 1-5 LB APPLIED .125±.030 TOP OF LEVER
8 HARDWARE FURNISHED ASSEMBLED WITH SWITCH OR IN PACKET 15PA313-AT PER MIL-PRF-8805
9 - REPLACEMENT MOUNTING HARDWARE PACKET 15PA313-AT

DETAIL RATING CHART

VOLTS	CYCLE	INRUSH AMPERES		AMPERES SEA LEVEL				AMPERES 50,000 FT			
		NC	NO	RES	IND	MOTOR	LAMP	RES	IND	MOTOR	LAMP
30	DC	2	2	1	.5		.2	1	.5		.2

NOTE: INDUCTIVE LOADS: 30 VDC USE AN3179-6 INDUCTOR, 115 VAC AT 75% PF

ANSI Y14.5M-1982 APPLIES

THIS DRAWING COVERS A PROPRIETARY ITEM AND IS THE PROPERTY OF MICRO SWITCH. A DIVISION OF HONEYWELL. THIS DRAWING IS NOT TO BE COPIED OR USED WITHOUT THE APPROVAL OF MICRO SWITCH

THIRD ANGLE PROJECTION

SCALE FULL

DO NOT SCALE PRINT

UNLESS OTHERWISE SPECIFIED TOLERANCES ARE

ONE PLACE	(.0)	±.030
TWO PLACE	(.00)	±.015
THREE PLACE	(.000)	±.005
ANGLES		±

WEIGHT .07 LB EST

CHARACTERISTICS	ELECTRICAL DATA
OPERATING FORCE ------ 7	CONTACT ARRANGEMENT 4X S P D T
DIFFERENTIAL FORCE	
RELEASE FORCE	
PRETRAVEL	
DIFFERENTIAL TRAVEL	
OVERTRAVEL	
FREE POSITION	

CATALOG LISTING 64AT34 SERIES CHART 1
PAGE 1 OF 1
RELEASE NO. PR-22023
REPLACES -
ISSUE 3
CHECK
REVISIONS
A 203862 JLH SEP01
B 204763 C S L 24 JAN 02
CHECK
11SEP01
SAV
CHECK
11SEP01
PTC/CAD 2D
DRAWN JLH