MICRO SWITCH
FREEPORT ILLINOIS U S A
A DIVISION OF HONEYWELL
FED MFG CODE 91929

SWITCH-ENCLOSED

CATALOG LISTING
602EN604

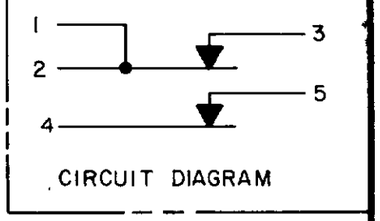

CIRCUIT DIAGRAM

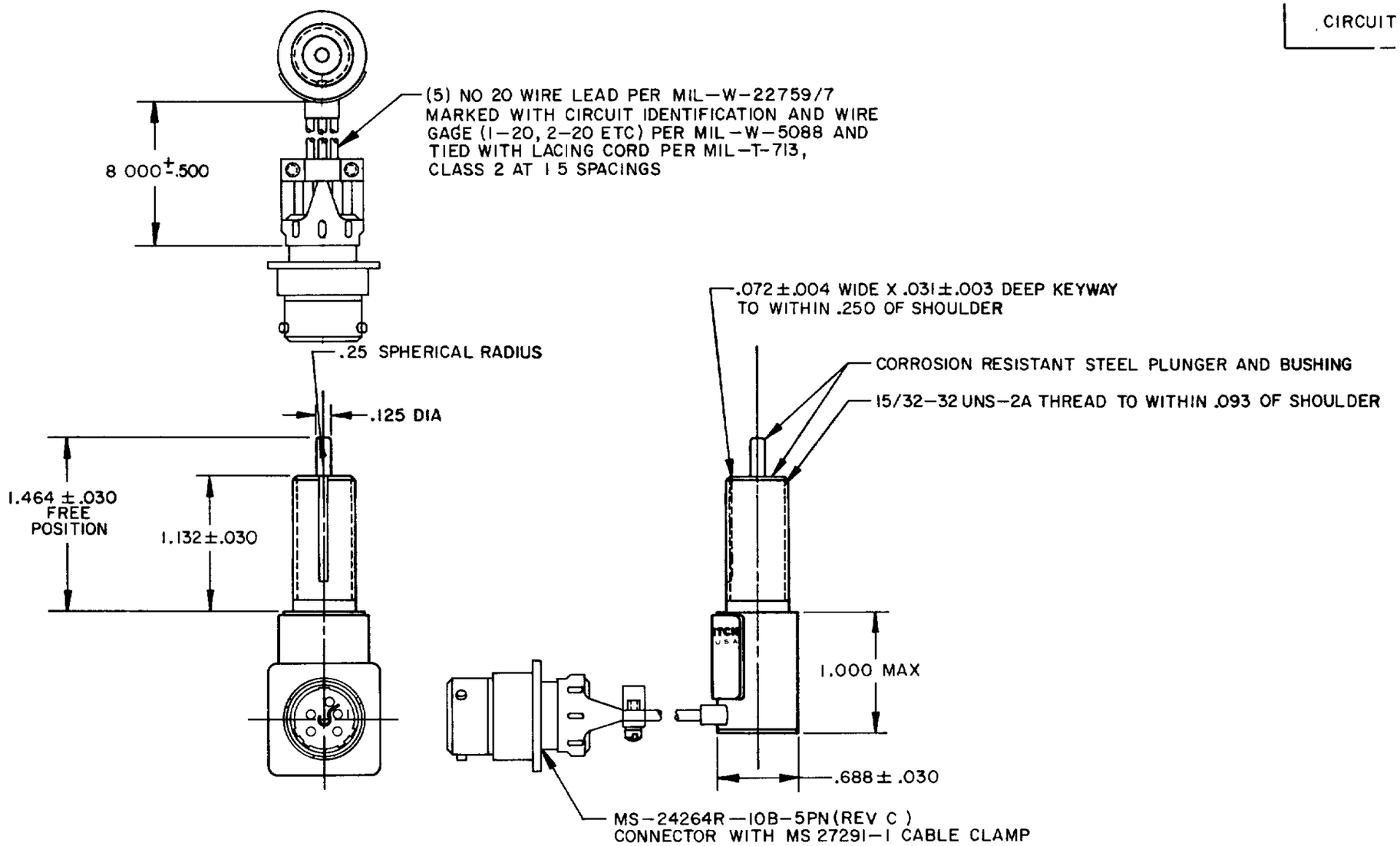

DRAWING NUMBER	M 602EN604
RELEASE NO.	PR-1515
REPLACES	
ISSUE	12 13 14 15 16 17
CHECK	
CHECK	
CHECK	
CHECK	
DRAWN	J A P 5 MAR 80
CEB	6 MAR 80
REVISIONS	
A	C044351
J A P 5 MAR 80	
B	CO-51415
KAG 6 MAY 82	
C	C057370
TSK 14 MAY 85	
D	C066363
T J O 8 SEP 89	
E	CO 67008
MAM 1 FEB 90	
F	C077642
DLT 25 MAY 94	

FO-52851-A

THIS DRAWING COVERS A PROPRIETARY ITEM AND IS THE PROPERTY OF MICRO SWITCH, A DIVISION OF HONEYWELL. THIS DRAWING IS NOT TO BE COPIED OR USED WITHOUT THE APPROVAL OF MICRO SWITCH

THIRD ANGLE PROJECTION

SCALE FULL

DO NOT SCALE PRINT

CHARACTERISTICS

OPERATING FORCE	2-4 LB
FULL OVERTRAVEL FORCE	15 LB MAX
RELEASE FORCE	1 LB MIN
PRETRAVEL	040 MAX
DIFFERENTIAL TRAVEL	020 MAX
OVERTRAVEL	250 MIN

ELECTRICAL DATA

CONTACT ARRANGEMENT
S P N C (2)

LOAD	28 VDC SEA LEVEL	28 VDC 50,000 FT.
RES	7	7
IND	4	2 5
MOTOR	4	
LAMP		

UNLESS OTHERWISE SPECIFIED TOLERANCES ARE

ONE PLACE	(.0)	±.030
TWO PLACE	(.00)	±.015
THREE PLACE	(.000)	±.005
ANGLES		±

RAW MATERIAL-COMMERCIAL STANDARD
MICRO SWITCH STANDARDS APPLY
DIMENSIONS ARE TO BE MET BEFORE PROTECTIVE COATINGS ARE APPLIED

WEIGHT

NOTES
1 - CORROSION RESISTANT STEEL ENCLOSURE
2 - SWITCH SEALED PER MIL-S-8805 SYMBOL 4
3 - CIRCUIT DIAGRAM, CAT. LIST., AND DATE CODE, CUSTOMER CODE NO. (96193), CUST. PART NO. (203336). OUR MANUFACTURING NO. (91929) ARE SHOWN ON NAMEPLATE
4 - HARDWARE MAY BE PACKAGED UNASSEMBLED PER MIL-S-8805