MICRO SWITCH
FREEPORT ILLINOIS U S A
A DIVISION OF HONEYWELL
FED. MFG. CODE 91929

SWITCH - ENCLOSED

CATALOG LISTING
602EN55-6

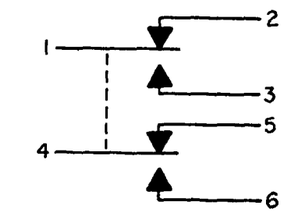

CIRCUIT DIAGRAM

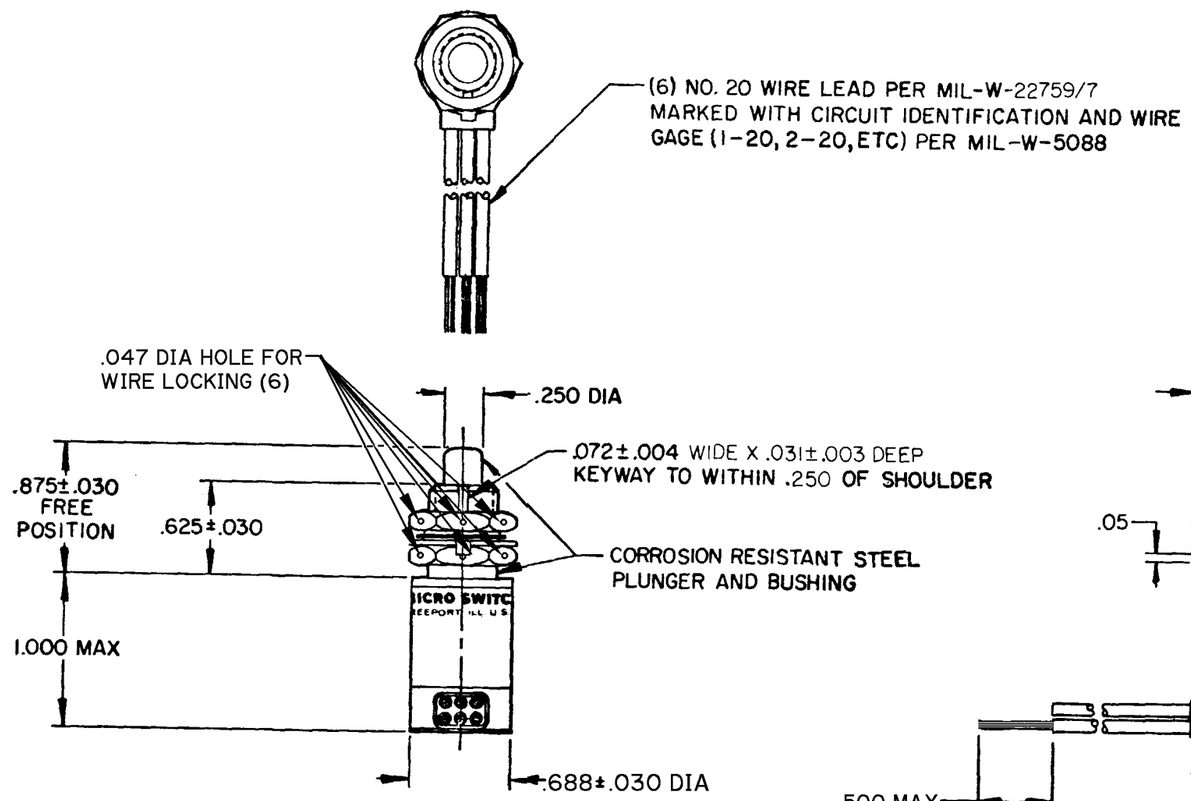

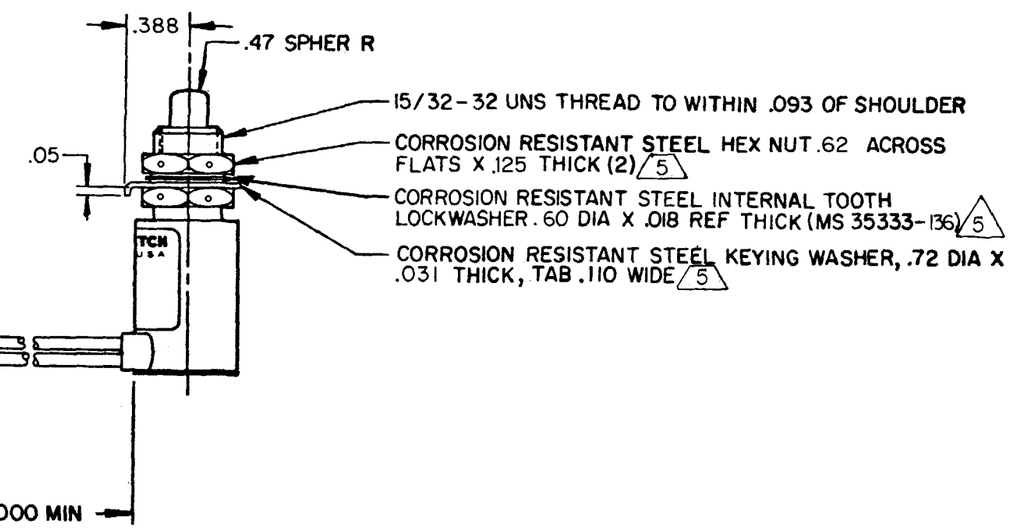

NOTES

1 - **CORROSION RESISTANT STEEL ENCLOSURE**
2 - **CIRCUIT DIAGRAM**, FED MFG. CODE, DATE CODE **AND CAT. LIST. ARE SHOWN ON NAMEPLATE**
3 - **SWITCH SEALED PER MIL-PRF-8805 SYMBOL 4**
4 - **COINCIDENCE OF OPERATING AND RELEASING POINTS:** .010 OF PLUNGER TRAVEL
5 HARDWARE MAY BE PACKAGED UNASSEMBLED PER MIL-PRF-8805

THIS DRAWING COVERS A PROPRIETARY ITEM AND IS THE PROPERTY OF MICRO SWITCH, A DIVISION OF HONEYWELL. THIS DRAWING IS NOT TO BE COPIED OR USED WITHOUT THE APPROVAL OF MICRO SWITCH.

THIRD ANGLE PROJECTION

SCALE FULL

DO NOT SCALE PRINT

TOLERANCES
APPLY TO DESIGN UNITS. CONVERSIONS ARE ONLY FOR REFERENCE. UNLESS NOTED. TOLERANCES ARE ±

	DIM. mm	TOL. mm/in	DIM. in	TOL. mm/in
NO PLACES	X	1/.04		
ONE PLACE	X.X	0.4/.016	X.X	0.5/.02
TWO PLACES	X.XX	0.15/.006	X.XX	0.38/.015
THREE PLACES			X.XXX	0.13/.005
ANGLES				

DESIGN UNITS SI METRIC ☐ US CUSTOMARY ■

RAW MATERIAL-COMMERCIAL STANDARD
MICRO SWITCH STANDARDS APPLY

DIMENSIONS ARE TO BE MET BEFORE PROTECTIVE COATINGS ARE APPLIED

WEIGHT 6.2 OZ MAX

CHARACTERISTICS

OPERATING FORCE	3-6 LB
FULL OVERTRAVEL FORCE	17 LB MAX
RELEASE FORCE	2 LB MIN
PRETRAVEL	.040 MAX
DIFFERENTIAL TRAVEL	.020 MAX
OVERTRAVEL	.125 MIN

ELECTRICAL DATA

CONTACT ARRANGEMENT
SPDT(2)

LOAD	28 VDC SEA LEVEL	28 VDC 50,000 FT.
RES	7	7
IND	4	2.5
MOTOR	4	

602EN55-6
PAGE 1 OF 1

REPLACES
RELEASE NO. SR-12628
DRAWING NUMBER M
ISSUE X X 15 X 8
CHECK

REVISIONS
A C044351 DJW 5 MAR 80
B C047573 JAP 7 AUG 80
C CO 49806C KAG 28 SEP 81
D C057370 JAP 14 MAY 85
E C095068 GJW 6 MAY 99

CHECK
7 MAR 86
CEE
CHECK
80 MAR 5 W J D
DRAWN

FORMTEK
FO-5285 1-A