MICRO SWITCH
a Honeywell Division
FED. MFG. CODE 91929

SWITCH - TOGGLE

CATALOG LISTING

4NT1-12 SERIES CHART 1

THIS DRAWING COVERS A PROPRIETARY ITEM AND IS THE PROPERTY OF MICRO SWITCH. A DIVISION OF HONEYWELL. THIS DRAWING IS NOT TO BE COPIED OR USED WITHOUT THE APPROVAL OF MICRO SWITCH

CATALOG LISTING	AVAILABLE LOCKING CONBINATIONS FOR CONFIGURATION SEE LETTERED DETAILS	STYLE NUMBER	CURRENT CAPACITY (AMPS)								
			RESISTIVE LOAD					LAMP LOAD		INDUCTIVE LOAD		CON-TIN-UOUS
			DC VOLTS			AC VOLTS						
			28	125	250	125	250	28 VDC	125 VAC	28 VDC	125 VAC	
4NT1-12	NONE	1	20	.75	.5	15	6	5	4	12	15	
4NT1-12 △5	A,B,D,E,F,G,H,J,K,L,M,N,P	2										

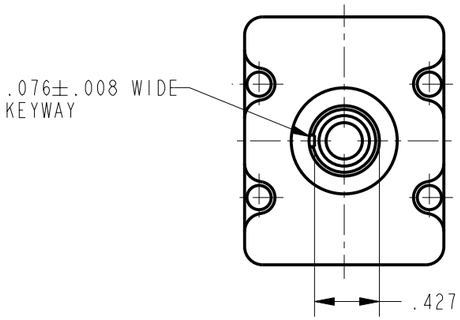

STYLE 1 LEVER

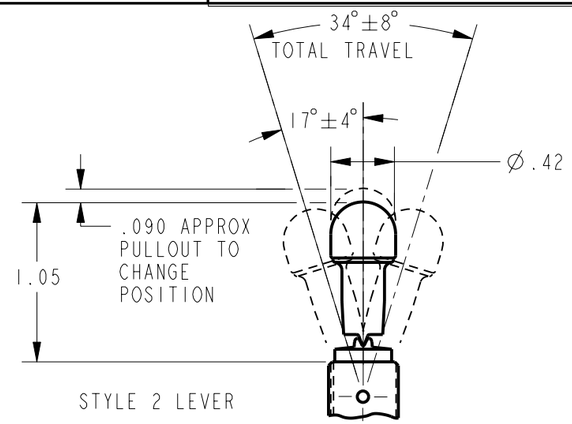

STYLE 2 LEVER

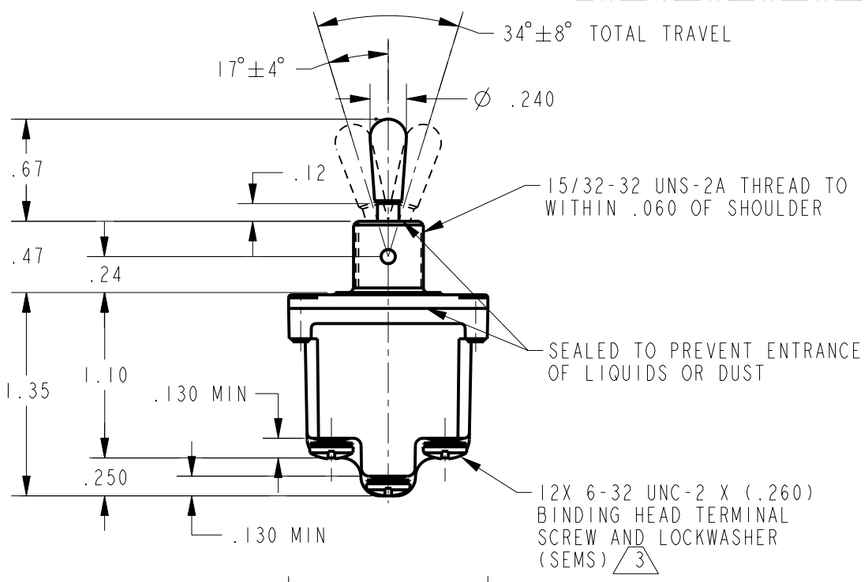

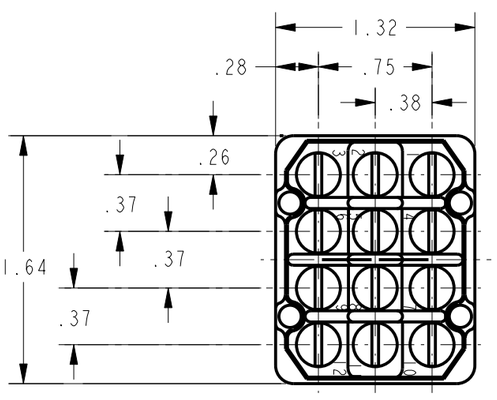

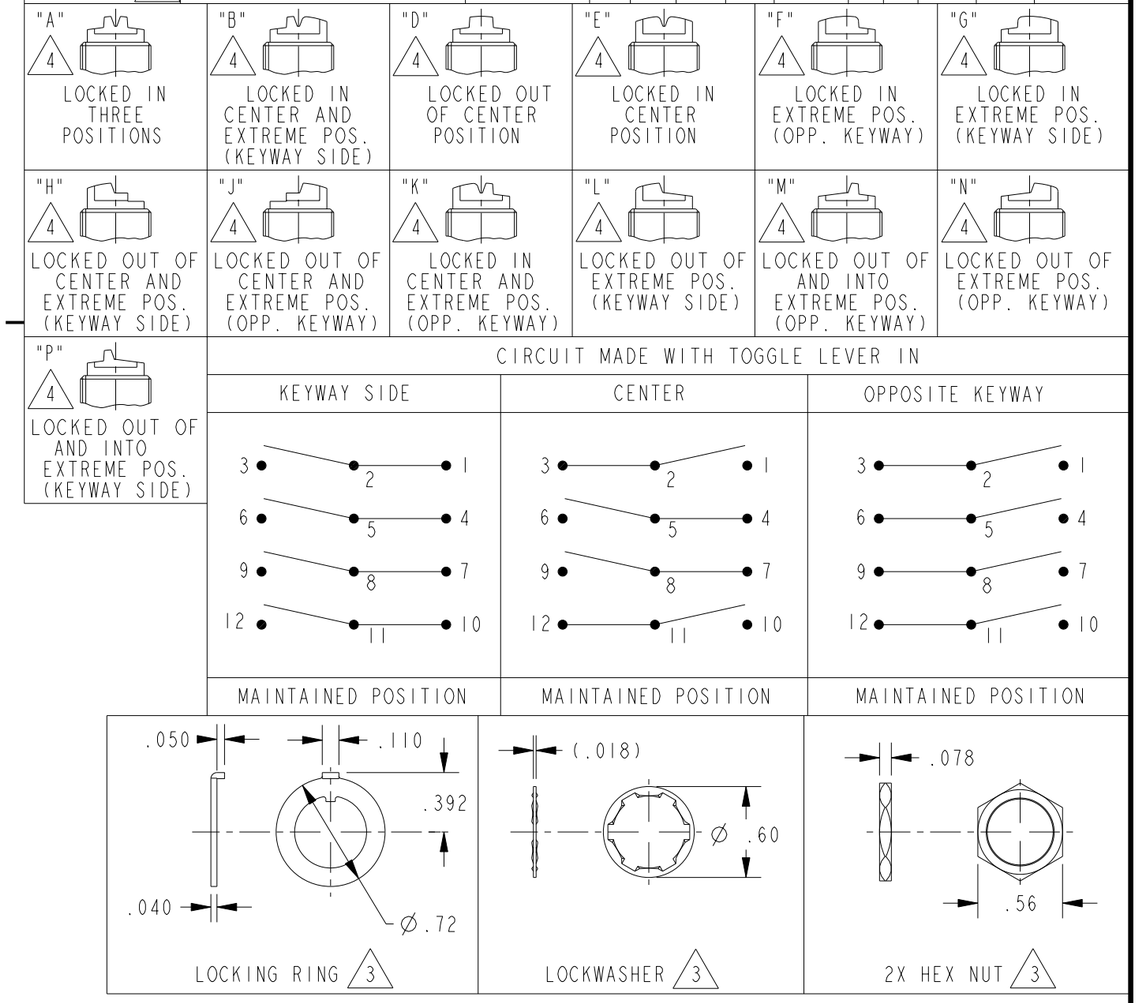

NOTES
1 - SWITCHES ARE CAPABLE OF WITHSTANDING A TEMPERATURE OF 160°F CONTINUOUSLY AT FULL RATED LOAD
2 - MICRO SWITCH CAT. LIST. MARKED ON SIDE OF SWITCH
△3 FURNISHED UNASSEMBLED
△4 KEYWAY SHOWN ON LEFT SIDE
△5 SUFFIX LETTER MUST BE ADDED FOR DESIRED TYPE OF TOGGLE LOCKING. SEE CHART FOR AVAILABLE LOCKING COMBINATIONS
6 - FOR TERMINAL COVER SEE MICRO SWITCH CAT. LIST. 5PA9

ELECTRICAL RATING

L191 15A 125, 250, 277 VAC
1/2HP 125 VAC
1HP 250, 277 VAC
5A 125 VAC "L"

THIRD ANGLE PROJECTION

SCALE FULL

DO NOT SCALE PRINT

UNLESS OTHERWISE SPECIFIED TOLERANCES ARE

ONE PLACE	(.0)	±.030
TWO PLACE	(.00)	±.015
THREE PLACE	(.000)	±.005
ANGLES		±

WEIGHT

ANSI Y14.5M-1982 APPLIES

CATALOG LISTING 4NT1-12 SERIES CHART 1
PAGE 1 OF 1
ISSUE 4
REVISIONS
A 204387 G J W NOV 01
REPLACES -
RELEASE NO. PR-20030
CHECK
CHECK 15 NOV 01
CHECK SAV 15 NOV 01
DRAWN GJW 15 NOV 01
PTC/CAD 2D