MICRO SWITCH
a Honeywell Division
FED. MFG. CODE 91929

ASSEMBLY- TOGGLE SWITCH

CATALOG LISTING
32AT11-T2

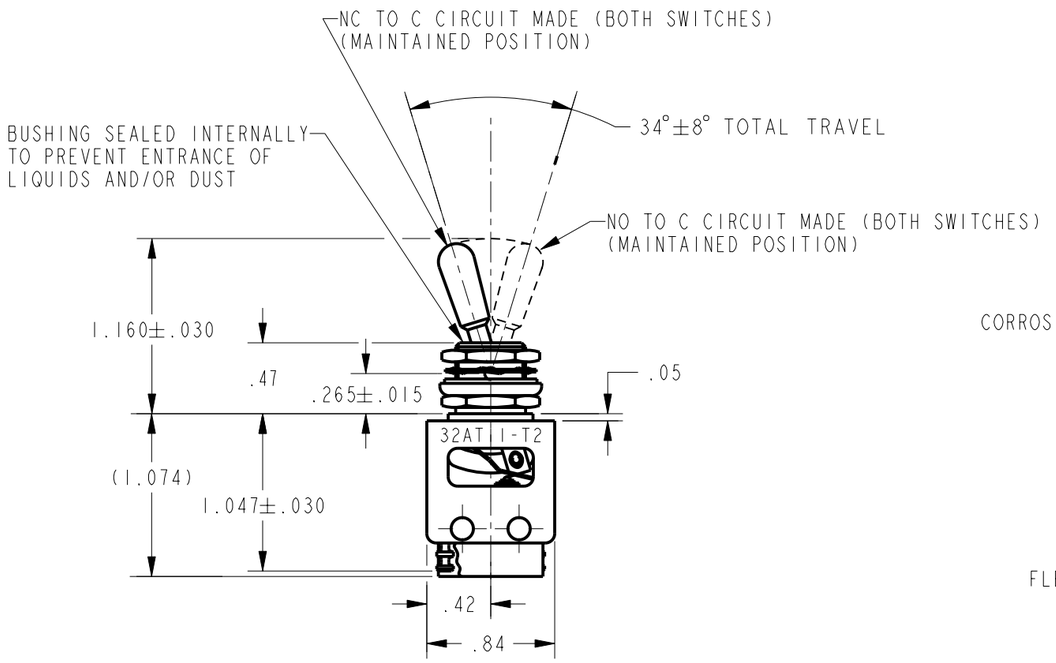

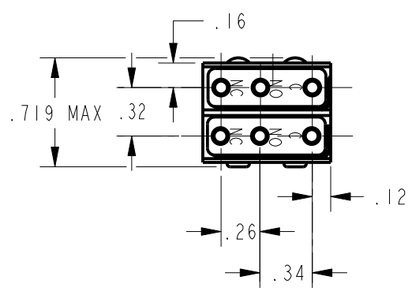

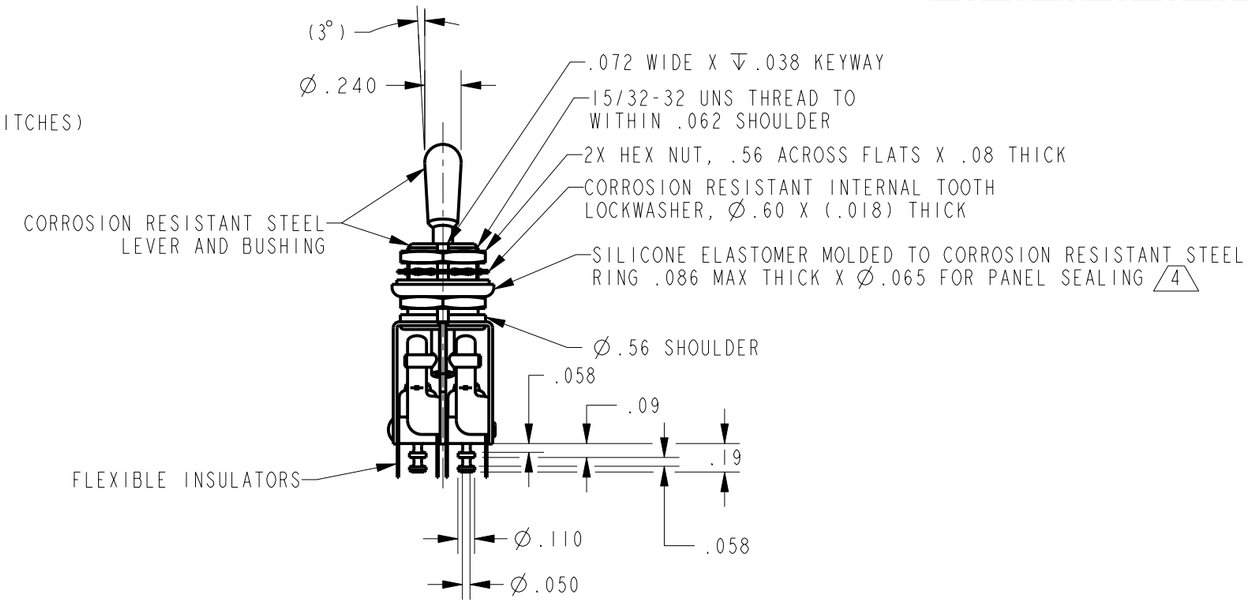

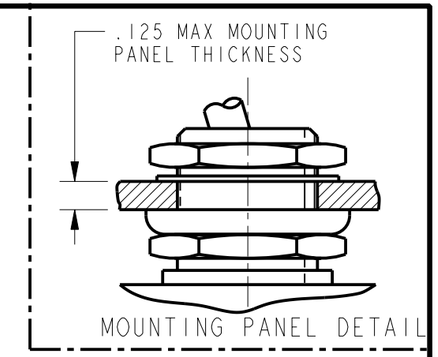

NOTES
1 - BASIC SWITCHES HAVE 24K SOLID GOLD CONTACTS
2 - UNIT INCLUDES 2X CAT LIST ISM23-T2 BASIC SWITCHES
3 - TERMINALS ARE PLATED FOR SOLDERING
4 - FOR PANEL SEAL TO BE EFFECTIVE MTG HOLE IN PANEL SHOULD NOT EXCEED Ø.500
5 - SWITCHES DO NOT NECESSARILY OPERATE SIMULTANEOUSLY

THIS DRAWING COVERS A PROPRIETARY ITEM AND IS THE PROPERTY OF MICRO SWITCH, A DIVISION OF HONEYWELL. THIS DRAWING IS NOT TO BE COPIED OR USED WITHOUT THE APPROVAL OF MICRO SWITCH

THIRD ANGLE PROJECTION

SCALE FULL

DO NOT SCALE PRINT

UNLESS OTHERWISE SPECIFIED TOLERANCES ARE

ONE PLACE	(.0)	±.030
TWO PLACE	(.00)	±.015
THREE PLACE	(.000)	±.005
ANGLES		±

WEIGHT .06 LB

ANSI Y14.5M-1982 APPLIES

CHARACTERISTICS

ELECTRICAL DATA

CONTACT ARRANGEMENT
2X S P D T

30 VOLTS DC RATING

INDUCTIVE--SEA LEVEL----- 1/2 AMP
50,000 FT----- 1/2 AMP
RESISTIVE--SEA LEVEL-------1 AMP
50,000 FT------ 1 AMP
MAXIMUM INRUSH------ 2 AMP

32AT11-T2
CATALOG LISTING
PAGE 1 OF 1
RELEASE NO. PR-22037
REPLACES -
ISSUE 2
M
CHECK
REVISIONS
A 206040 D L T 08 JUL 02
CHECK
CHECK 08 JUL 02
SAV
CHECK
08 JUL 02
PTC/CAD 2D
DRAWN D L T 08 JUL 02