MICRO SWITCH
FREEPORT, ILLINOIS, U.S.A.
A DIVISION OF HONEYWELL
FED. MFG. CODE 91929

ASSEMBLY – TOGGLE SWITCH

CATALOG LISTING
31AT418-T2

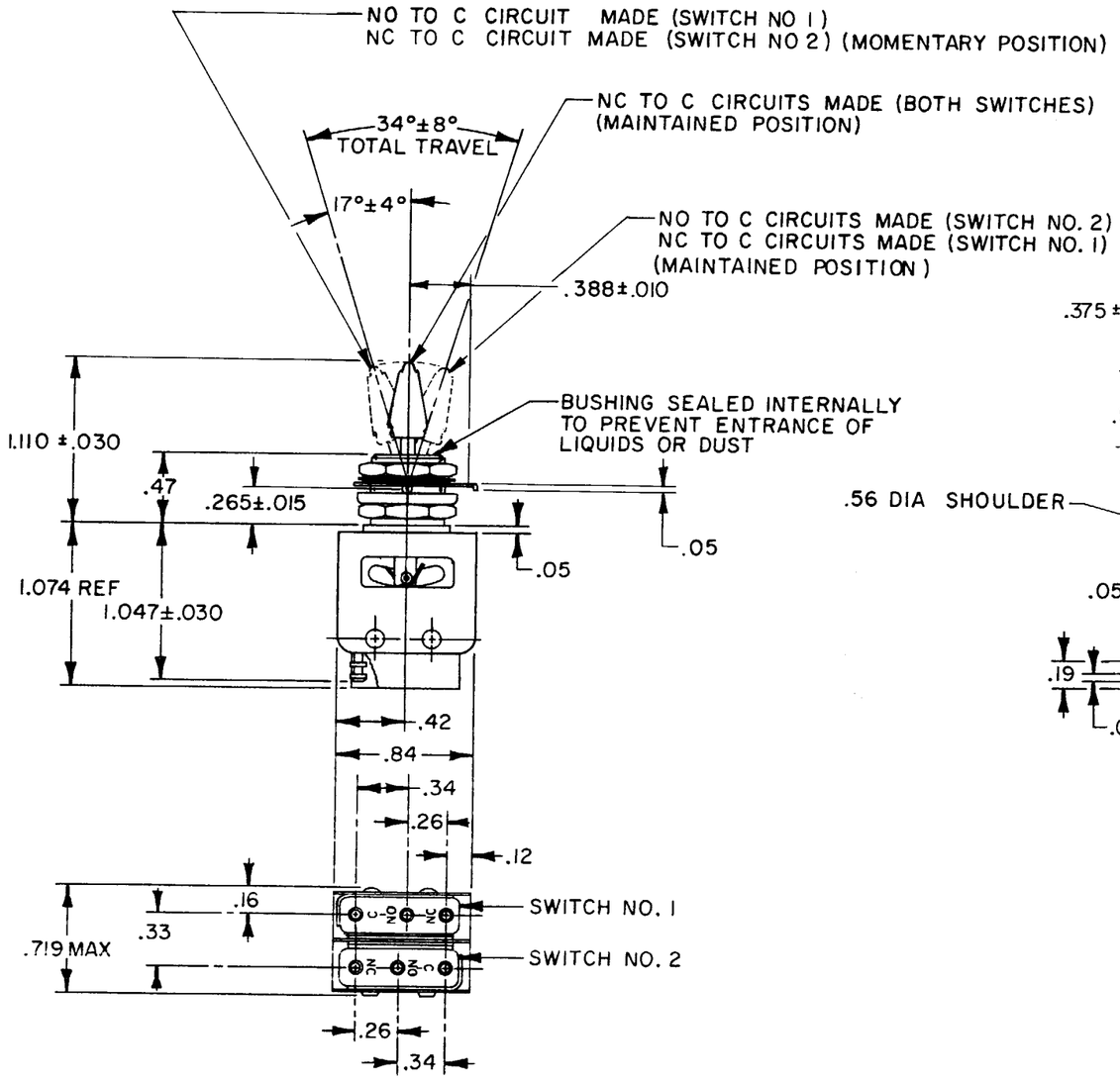

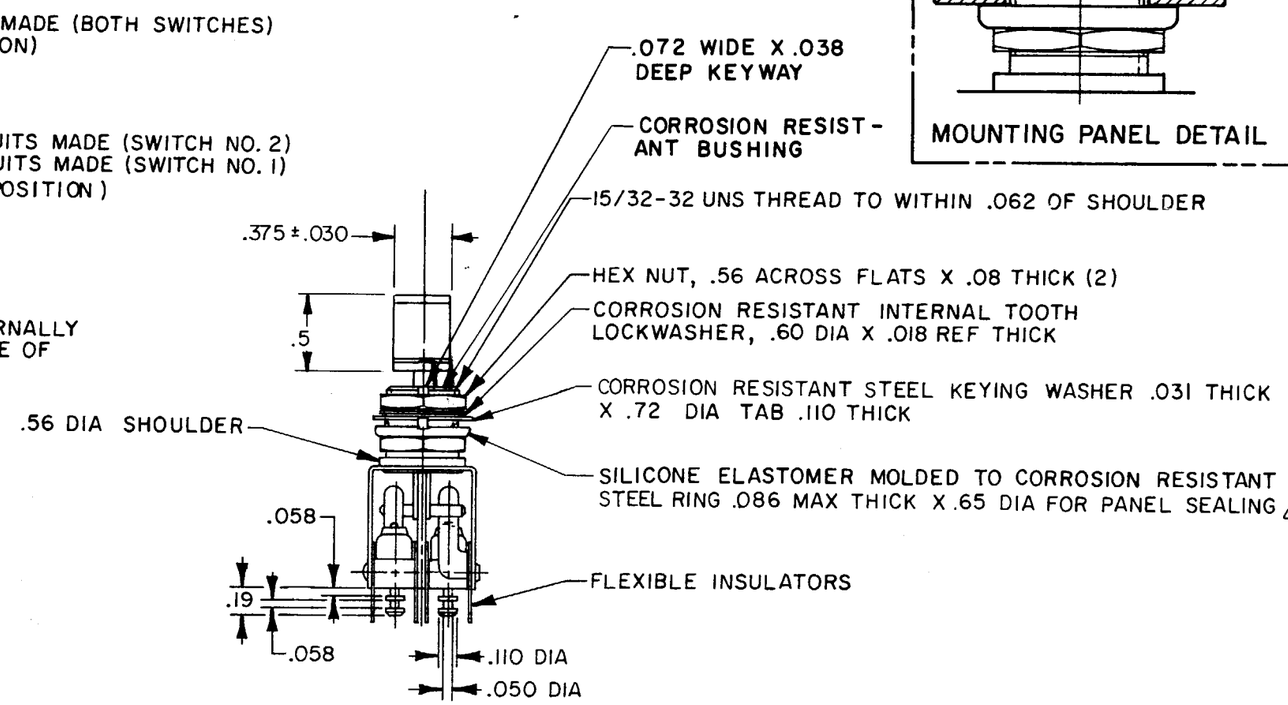

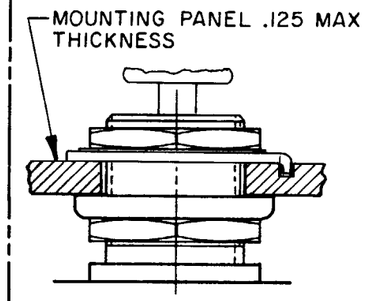

MOUNTING PANEL DETAIL

NOTES
1 - UNIT INCLUDES CAT. LIST. 21SM284-T2 TYPE BASIC SWITCH (2)
2 - TERMINALS ARE PLATED FOR SOLDERING
3 - KNOB PORTION OF TOGGLE LEVER BRIGHT ANODIZED
4 FOR PANEL SEAL TO BE EFFECTIVE, MTG. HOLE IN PANEL SHOULD NOT EXCEED .500 DIA

THIS DRAWING COVERS A PROPRIETARY ITEM AND IS THE PROPERTY OF MICRO SWITCH. A DIVISION OF HONEYWELL. THIS DRAWING IS NOT TO BE COPIED OR USED WITHOUT THE APPROVAL OF MICRO SWITCH.

CHARACTERISTICS

ELECTRICAL DATA

CONTACT ARRANGEMENT
S P D T (2)

250 VAC ---------- 5 AMP

INDUCTIVE ---- SEA LEVEL -- 3 AMP
50,000 FT -- 2.5 AMP
RESISTIVE ---- SEA LEVEL -- 5 AMP
50,000 FT --- 5 AMP
MAXIMUM INRUSH -------- 24 AMP

SCALE FULL
DO NOT SCALE PRINT

TOLERANCES
APPLY TO DESIGN UNITS. CONVERSIONS ARE ONLY FOR REFERENCE. UNLESS NOTED, TOLERANCES ARE ±

	DIM. mm	TOL. mm/in	DIM. in	TOL. mm/in
NO PLACES	X	1/.04		
ONE PLACE	X.X	0.4/.016	X.X	0.8/.03
TWO PLACES	X.XX	0.15/.005	X.XX	0.38/.015
THREE PLACES			X.XXX	0.13/.005
ANGLES				

DESIGN UNITS SI METRIC ☐ US CUSTOMARY ■

THIRD ANGLE PROJECTION

WEIGHT .06 LB APPROX

REPLACES
RELEASE NO. PR-12456
DRAWING NUMBER M 31AT418-T2
ISSUE 3
REVISIONS
A CO 56281 G J W 28 SEP 85
B CO 66089 D A W 27 FEB 91
CHECK
CHECK
CHECK
CHECK
DRAWN G J W 28 SEP 83
FO-52851-B