MICRO SWITCH
a Honeywell Division
FED. MFG. CODE 91928

ASSEMBLY - TOGGLE SWITCH

CATALOG LISTING
31AT416-T2

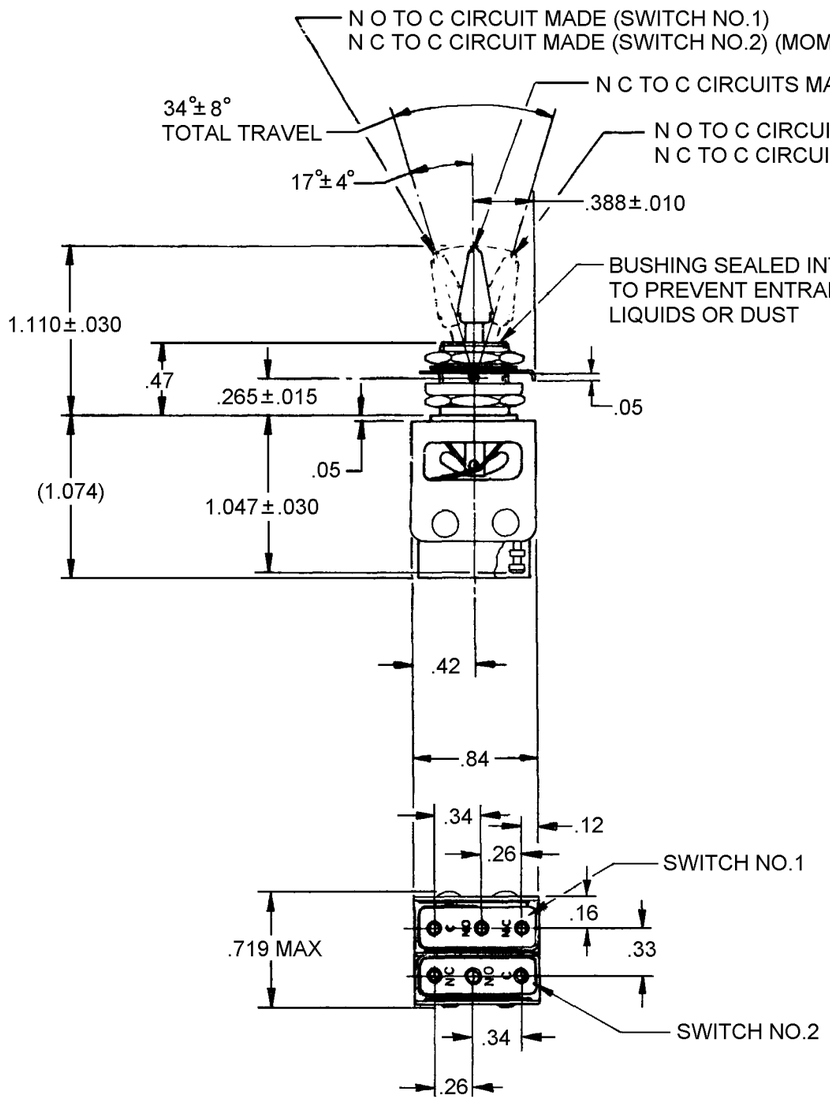

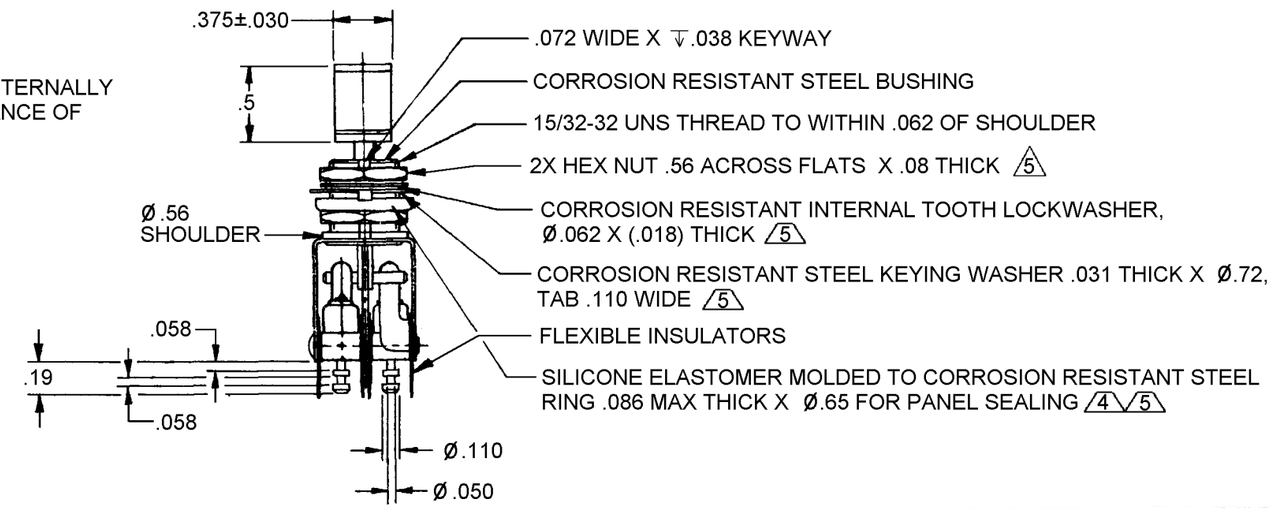

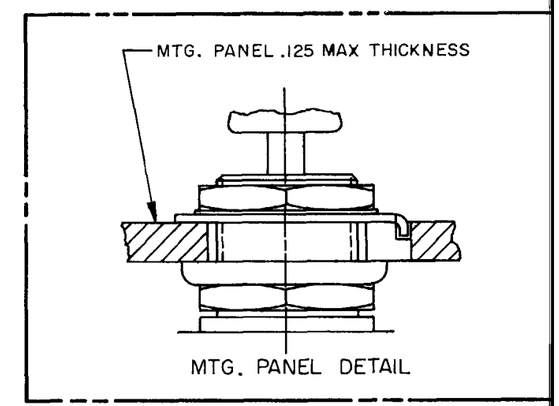

NOTES
1 - UNIT INCLUDES CATALOG LISTING 21SM284-T2
2 - TERMINALS ARE PLATED FOR SOLDERING
3 - KNOB PORTION OF TOGGLE LEVER BRIGHT ANODIZED
4 FOR PANEL SEAL TO BE EFFECTIVE, MTG. HOLE IN PANEL SHOULD NOT EXCEED Ø.500
5 HARDWARE FURNISHED ASSEMBLED WITH SWITCH OR IN PACKET PER MIL-PRF-8805

THIS DRAWING COVERS A PROPRIETARY ITEM AND IS THE PROPERTY OF MICRO SWITCH. A DIVISION OF HONEYWELL. THIS DRAWING IS NOT TO BE COPIED OR USED WITHOUT THE APPROVAL OF MICRO SWITCH

THIRD ANGLE PROJECTION

SCALE FULL

DO NOT SCALE PRINT

CHARACTERISTICS

ELECTRICAL DATA

CONTACT ARRANGEMENT
2X S P D T

250 VAC — — — — — — — — — — — — — — — — — 5 AMP
INDUCTIVE — — — — — SEA LEVEL — — — — 3 AMP
50,000 FT — — — — 2.5 AMP
RESISTIVE — — — — — SEA LEVEL — — — — 5 AMP
50,000 FT — — — — — 5 AMP

MAXIMUM INRUSH — — — — — — — — — — 24 AMP

UNLESS OTHERWISE SPECIFIED TOLERANCES ARE

ONE PLACE	(.0)	±.030
TWO PLACE	(.00)	±.015
THREE PLACE	(.000)	±.005
ANGLES		±

WEIGHT .06 LB APPROX

ANSI Y14.5M-1982 APPLIES

CATALOG LISTING 31AT416-T2
PAGE 1 OF 1
RELEASE NO. PR-1478
REPLACES
ISSUE 5
M
REVISIONS
A 206093 DLT 6 AUG 02
CHECK
CHECK 6 AUG 02
CHECK SAV
CHECK 6 AUG 02
RASTER
DRAWN DLT 6 AUG 02