**MICRO SWITCH**
a Honeywell Division
FED. MFG. CODE 91929

# SWITCH – BASIC

CATALOG LISTING
2SE322

WARNING– THIS PRODUCT IS SUBJECT TO THE U.S. INTERNATIONAL TRAFFIC IN ARMS REGULATIONS (ITAR), AND THE EXPORT CONTROL LAWS OF THE UNITED STATES. TRANSFER OF TECHNICAL DATA PERTAINING TO THIS PRODUCT BY ANY MEANS TO A FOREIGN PERSON PER ITAR DEFINITIONS. WHETHER IN THE UNITED STATES OR ABROAD, WITHOUT A PRIOR EXPORT LICENSE OR OTHER APPROVAL FROM THE U.S. DEPARTMENT OF STATE, IS PROHIBITED.

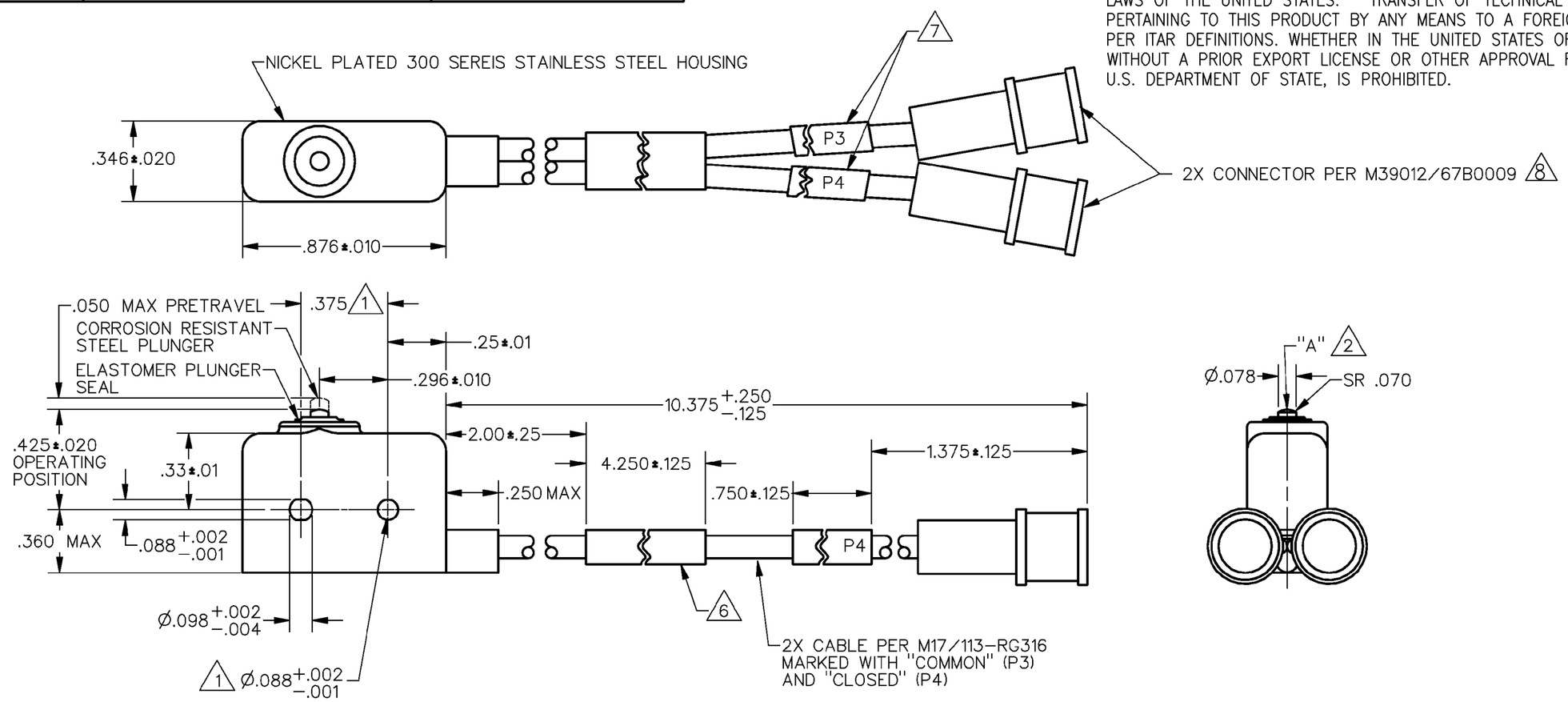


NOTES
1. MOUNTING HOLES WILL ACCEPT PINS OR SCREWS OF Ø.087 MAX ON .375±.002 CENTERS
2. ACTUATION IN LINE WITH ARROW "A" IS RECOMMENDED
3. – FOR USE IN TEMPERATURE RANGE: –65°F TO +221°F
4. – LEADWIRE SHIELDING GROUNDED TO METAL SWITCH ENCLOSURE
5. – BASIC SWITCH HAS 24K SOLID GOLD CONTACT MATERIAL
6. HEAT SHRINK TUBING MARKED WITH W1 18876ASSY13579972
7. HEAT SHRINK TUBING MARKED WITH "P3", "P4"
8. MATES WITH ITT INDUSTRIES P/N B51–053–0000–220 OR EQUIVALENT

THIS DRAWING COVERS A PROPRIETARY ITEM AND IS THE PROPERTY OF MICRO SWITCH. A DIVISION OF HONEYWELL. THIS DRAWING IS NOT TO BE COPIED OR USED WITHOUT THE APPROVAL OF MICRO SWITCH

THIRD ANGLE PROJECTION
SCALE 2:1
DO NOT SCALE PRINT

**CHARACTERISTICS**

| | |
|---|---|
| OPERATING FORCE | 5 – 17 OZ |
| RELEASE FORCE | 4 OZ MIN |
| RELEASE TRAVEL | .004 MIN |
| DIFFERENTIAL TRAVEL | .004 MAX |
| OVERTRAVEL | .003 MIN |

**ELECTRICAL DATA**

CONTACT ARRANGEMENT
S P N C

10 VDC – – – – – – – – – – – 0.5 MA
30 VOLTS DC RATING
INDUCTIVE –––––SEA LEVEL ––– 1/2 AMP
50,000 FT ––– 1/2 AMP
RESISTIVE –––––SEA LEVEL ––– 1 AMP
50,000 FT ––– 1 AMP
MAXIMUM INRUSH – – – – – – – – – – – – – – 2 AMP

**UNLESS OTHERWISE SPECIFIED TOLERANCES ARE**

| | | |
|---|---|---|
| ONE PLACE | (.0) | ±.030 |
| TWO PLACE | (.00) | ±.015 |
| THREE PLACE | (.000) | ±.005 |
| ANGLES | | ± |

WEIGHT 50 GRAMS MAX

ANSI Y14.5M–1982 APPLIES

2SE322
CATALOG LISTING
PAGE 1 OF 1
RELEASE NO. PR–23226
REPLACES
ISSUE 4
CHECK
REVISIONS
A PR23226 J A K 19 MAR 98
B C093012 J A F 29 JUN 98
C 0004926 PEH 20 APR 04
CHECK J J A 20 MAR 98
CHECK 18 MAR 98
DRAWN J A K
DDM/CAD