MICRO SWITCH
a Honeywell Division
FED. MFG. CODE 91929

SWITCH - TOGGLE (MAGNETIC HOLD-IN)

CATALOG LISTING
26ET31-2-G

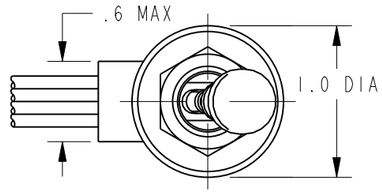

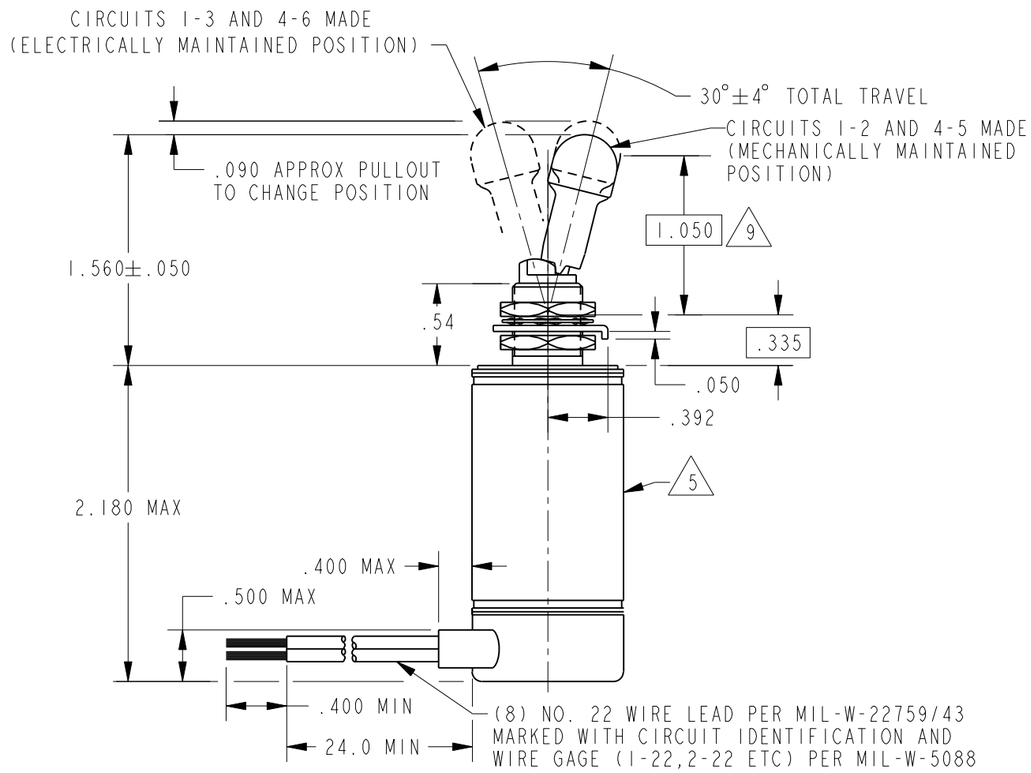

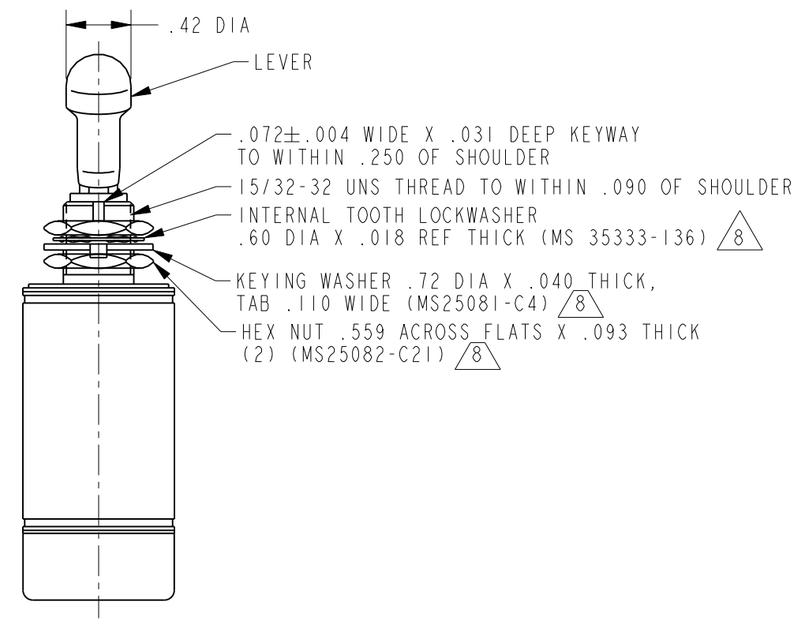

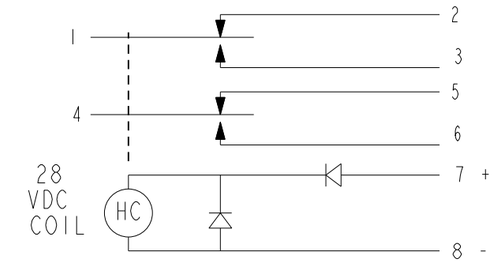

CIRCUIT DIAGRAM
(MECHANICALLY MAINTAINED
POSITION)

NOTES
1 - EXPOSED PARTS ARE OF CORROSION RESISTANT MATERIAL OR ARE SUITABLY PROTECTED TO PREVENT CORROSION, ENCLOSURE FINISHED WITH BLUE EPOXY BASED ENAMEL COLOR NO. 25184 PER FEDERAL STANDARD 595
2 - SWITCH SEALED PER MIL-S-5594
3 HOLD IN VOLTAGE: THE MINIMUM SPECIFIED VOLTAGE AT WHICH THE LEVER WILL REMAIN ACTUATED. HOLD IN MAY OCCUR AT A LOWER VALUE. DROP OUT VOLTAGE: THE VOLTAGE RANGE IN WHICH THE LEVER WILL BE RELEASED
4 - CIRCUITS CAN BE TRANSFERRED MANUALLY. ENERGIZING THE COIL WILL NOT CAUSE TRANFER OF CIRCUITS
5 CIRCUIT IDENTIFICATION IS SHOWN ON SWITCH
6 - SWITCHES DO NOT NECESSARILY OPERATE SIMULTANEOUSLY
7 - THE DIODES ARE JANTXV TYPE AND LIMIT THE EMI: SPIKES (TRANSIENTS OF DURATION LESS THAN 500 MICRO SECONDS) GENERATED BY THE SWITCH COIL SHALL NOT EXCEED +42 VOLTS OR -14 VOLTS ABSOLUTE
8 HARDWARE MAY BE FURNISHED UNASSEMBLED PER MIL-S-5594
9 FORCE TO BE APPLIED AT THIS POINT IN A DIRECTION PERPENDICULAR TO THE LEVER LONGITUDINAL AXIS

THIS DRAWING COVERS A PROPRIETARY ITEM AND IS THE PROPERTY OF MICRO SWITCH, A DIVISION OF HONEYWELL. THIS DRAWING IS NOT TO BE COPIED OR USED WITHOUT THE APPROVAL OF MICRO SWITCH

THIRD ANGLE PROJECTION

SCALE FULL

DO NOT SCALE PRINT

UNLESS OTHERWISE SPECIFIED TOLERANCES ARE

ONE PLACE	(.0)	±.030
TWO PLACE	(.00)	±.015
THREE PLACE	(.000)	±.005
ANGLES		±

WEIGHT 8.0 OZ MAX

CHARACTERISTICS 3

SOLENOID RATING AT 20°C

STEADY STATE LIMITS	20-30 VDC
HOLD IN	15 VDC
DROP OUT	1.5-15 VDC
OVERRIDE FORCE AT 30 VDC 9	2.5-10 LB MAX
OPERATING FORCE 9	7 LB MAX
COIL RESISTANCE	220 OHM MIN
PULL TO UNLOCK	3-5 LB

ELECTRICAL DATA

CONTACT ARRANGEMENT
S P D T (2)

VOLTAGE	RATINGS IN AMPHERES							
	SEA LEVEL				65,000 FT			
	INRUSH	RES	IND	MOTOR	INRUSH	RES	IND	MOTOR
28 VOLTS DC		4	2.5	4		4	2.0	4

~~ANSI Y14.5M-1982 APPLIES~~

26ET31-2-G
CATALOG LISTING
PAGE 1 OF 1
RELEASE NO. PR-7190
REPLACES -
ISSUE 15
CHECK
REVISIONS
A 205955 C S L 10 JUL 02
B 0007597 SW07AP 16 SEP 04
C 0040821 NR 18JUN08
18JUN08 CMH
CHECK
10 JUL 02
CMH
CHECK
10 JUL 02 2D
DRAWN C S L
PTC/CAD