MICRO SWITCH
FREEPORT, ILLINOIS, U.S.A.
A DIVISION OF HONEYWELL
FED. MFG. CODE 91929

ASSEMBLY-TOGGLE SWITCH

CATALOG LISTING
22AT55-4-M

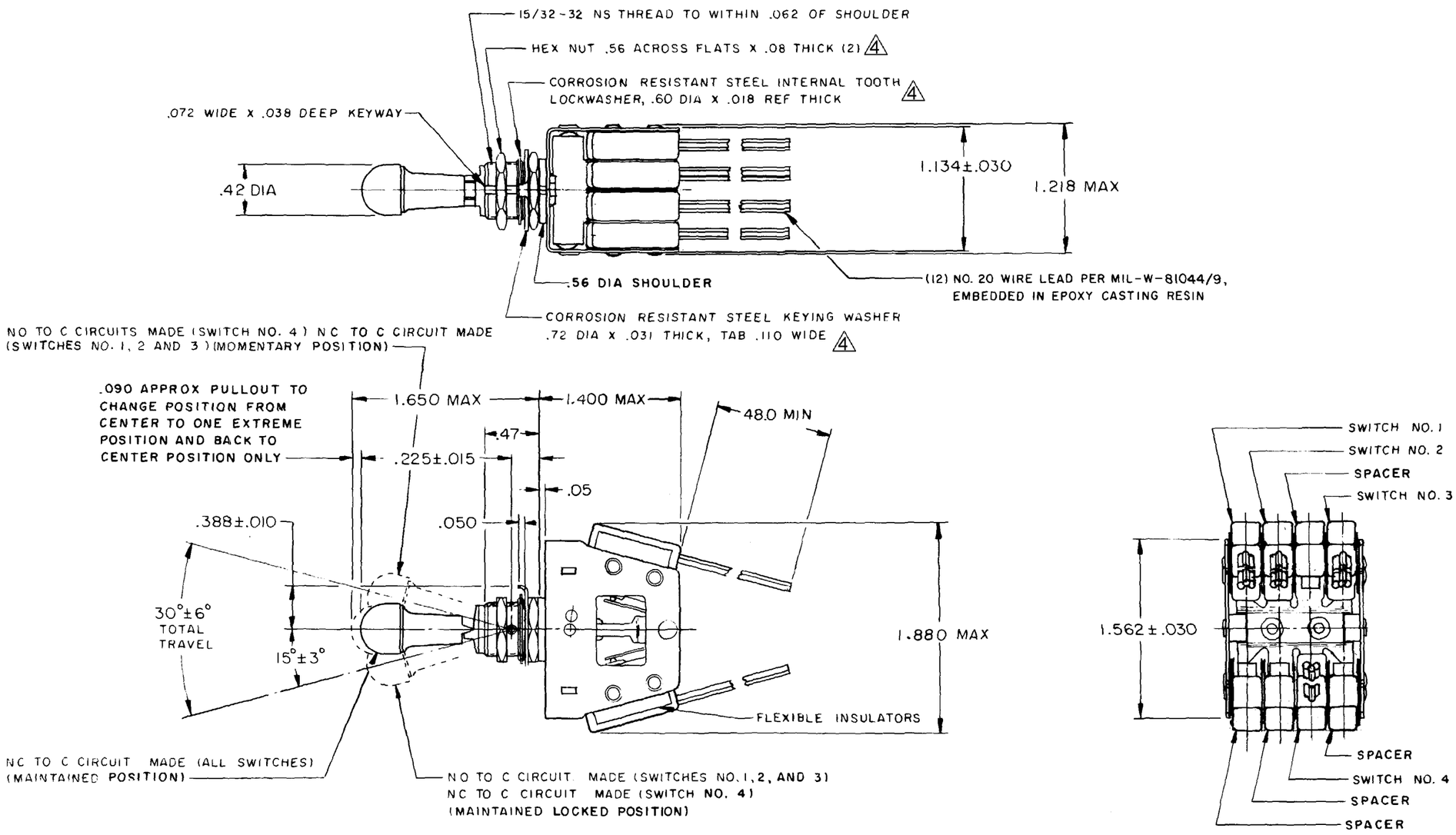

THIS DRAWING COVERS A PROPRIETARY ITEM AND IS THE PROPERTY OF MICRO SWITCH, A DIVISION OF MINNEAPOLIS-HONEYWELL REGULATOR CO. THIS DRAWING IS NOT TO BE COPIED OR USED WITHOUT THE APPROVAL OF MICRO SWITCH.

CHARACTERISTICS	ELECTRICAL DATA	
	CONTACT ARRANGEMENT S P D T (4)	SCALE FULL
	250 VAC — — — — — — — — — — — — 5 AMP	DO NOT SCALE PRINT
	30 VOLTS DC RATING	UNLESS OTHERWISE NOTED
	INDUCTIVE — — — — SEA LEVEL — — — 3 AMP	DIMENSIONS ARE IN INCHES
	50,000 FT — — 2.5 AMP	TOLERANCES ARE:
	RESISTIVE — — — — SEA LEVEL — — — 5 AMP	ONE PLACE (.0) ±.030
	50,000 FT — — — 5 AMP	TWO PLACE (.00) ±.015
	MAXIMUM INRUSH — — — — — — — 24 AMP	THREE PLACE (.000) ±.005
		ANGLES ±1°
		WEIGHT .55 LB MAX

NOTES
1 - SWITCHES DO NOT NECESSARY OPERATE SIMULTANEOUSLY
2 - UNIT INCLUDES 11SM1-T TYPE BASIC SWITCH (4)
3 - LEAD WIRES MARKED AT APPROXIMATELY 3.0 INTERVALS WITH SWITCH NUMBER AND CIRCUIT IDENTIFICATION (1 - NO), (1 - NC), (1 - C), (2 - NC), (2 - C), (2 - NO), (3 -C), (3 - NC), (3 -NO), (4 - C), (4 - NC), AND (4 - NO)
4 HARDWARE FURNISHED ASSEMBLED WITH SWITCH OR IN PACKET PER MIL-PRF-8805
5 - REPLACEMENT MOUNTING HARDWARE PACKET 15PA312-AT

22AT55-4-M PAGE 1 OF 1
REPLACES
RELEASE NO. SR 11414
DRAWING NUMBER M
ISSUE 8
8 JAN 64 LDC
CHECK
REVISIONS
A CORR OMW 7 JAN 64
B C019150 MBF 16 JULY 64
C CO 50566-B WJM 6 MAY 82
D C053053 JAP 10 JUN 83
E CO 6499 KAK 10 FEB 89
F C092636 GJW 17 DEC 98
G 207106 MDM JAN03
7 JAN 64 ED
CHECK
7 JAN 64
CHECK
DRAWN OMW 7 JAN 64
RASTER
FO-50378-003