MICRO SWITCH
FREEPORT ILLINOIS U S A
A DIVISION OF HONEYWELL
FED MFG CODE 91929

SWITCH-ENCLOSED

CATALOG LISTING
21EN284-RB

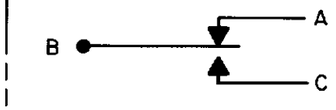

CIRCUIT DIAGRAM

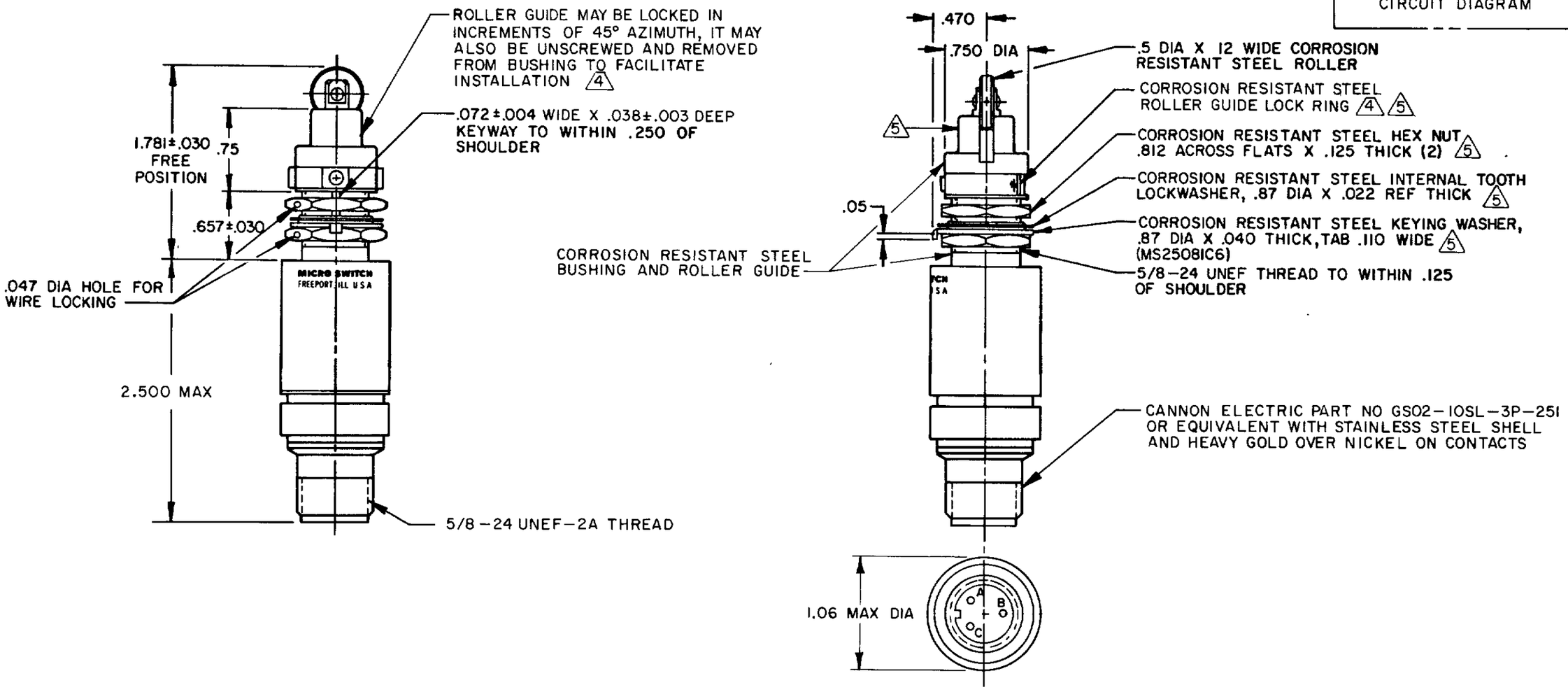

NOTES
1 - EXPOSED PARTS ARE CORROSION RESISTANT STAINLESS STEEL
2 - SWITCH SEALED PER MIL-S-8805 SYMBOL 4
3 CAT. LIST. 21EN284-RB, X40330-EN, MICRO IDENTIFICATION AND CIRCUIT DIAGRAM PERMANENTLY MARKED ON SIDE OF SWITCH
4 TO ADJUST ROLLER DIRECTION, REMOVE ROLLER GUIDE LOCK RING, SCREW ROLLER GUIDE DOWN AS FAR AS POSSIBLE, THEN UNSCREW TO DESIRED DIRECTION. SECURE BY REPLACING ROLLER GUIDE LOCK RING
5 HARDWARE MAY BE PACKAGED UNASSEMBLED PER MIL-S-8805

THIS DRAWING COVERS A PROPRIETARY ITEM AND IS THE PROPERTY OF MICRO SWITCH A DIVISION OF HONEYWELL. THIS DRAWING IS NOT TO BE COPIED OR USED WITHOUT THE APPROVAL OF MICRO SWITCH

THIRD ANGLE PROJECTION

SCALE FULL
DO NOT SCALE PRINT

TOLERANCES
APPLY TO DESIGN UNITS CONVERSIONS ARE ONLY FOR REFERENCE UNLESS NOTED TOLERANCES ARE ±

	DIM mm	TOL mm/in	DIM in	TOL mm/in
NO PLACES	X	1/.04		
ONE PLACE	X.X	0.4/.016	X.X	0.8/.03
TWO PLACES	X.XX	0.15/.006	X.XX	0.38/.015
THREE PLACES			X.XXX	0.13/.005
ANGLES				

DESIGN UNITS SI METRIC ☐ US CUSTOMARY ■

RAW MATERIAL-COMMERCIAL STANDARD
MICRO SWITCH STANDARDS APPLY
DIMENSIONS ARE TO BE MET BEFORE PROTECTIVE COATINGS ARE APPLIED

WEIGHT

CHARACTERISTICS

OPERATING FORCE — — — — — — 6-12 LB
FULL OVERTRAVEL FORCE — — — 30 LB MAX
RELEASE FORCE — — — — — — — 4 LB MIN
PRETRAVEL — — — — — — — — — .040 MAX
DIFFERENTIAL TRAVEL — — — — .020 MAX
OVERTRAVEL — — — — — — — — .250 MIN

ELECTRICAL DATA

CONTACT ARRANGEMENT
S P D T

LOAD	28 VDC SEA LEVEL	28 VDC 50,000 FT.
RES	4	4
IND	2	2
MOTOR	4	

M 21EN284-RB

DRAWING NUMBER
ISSUE 10 13 12

REPLACES X40330-EN
RELEASE NO PR-7141-T

REVISIONS
A C044351 J A L 30 OCT 79
B C047673 PART 4 R J H 12 AUG 80
C C059223 J A P 27 MAR 86
D C074101 L J F 1 FEB 95
E C 775048 K A D 18 MAY 96

DRAWN J A P 29 OCT 79
CHECK C E B 30 OCT 79
CHECK
CHECK
CHECK

FO 52851-A