MICRO SWITCH
FREEPORT ILLINOIS U S A
A DIVISION OF HONEYWELL
FED. MFG. CODE 91929

SWITCH - ENCLOSED

CATALOG LISTING
1EN202-R

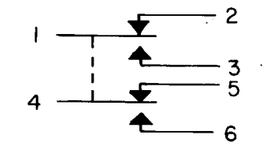

NOT USED - 7
CIRCUIT DIAGRAM

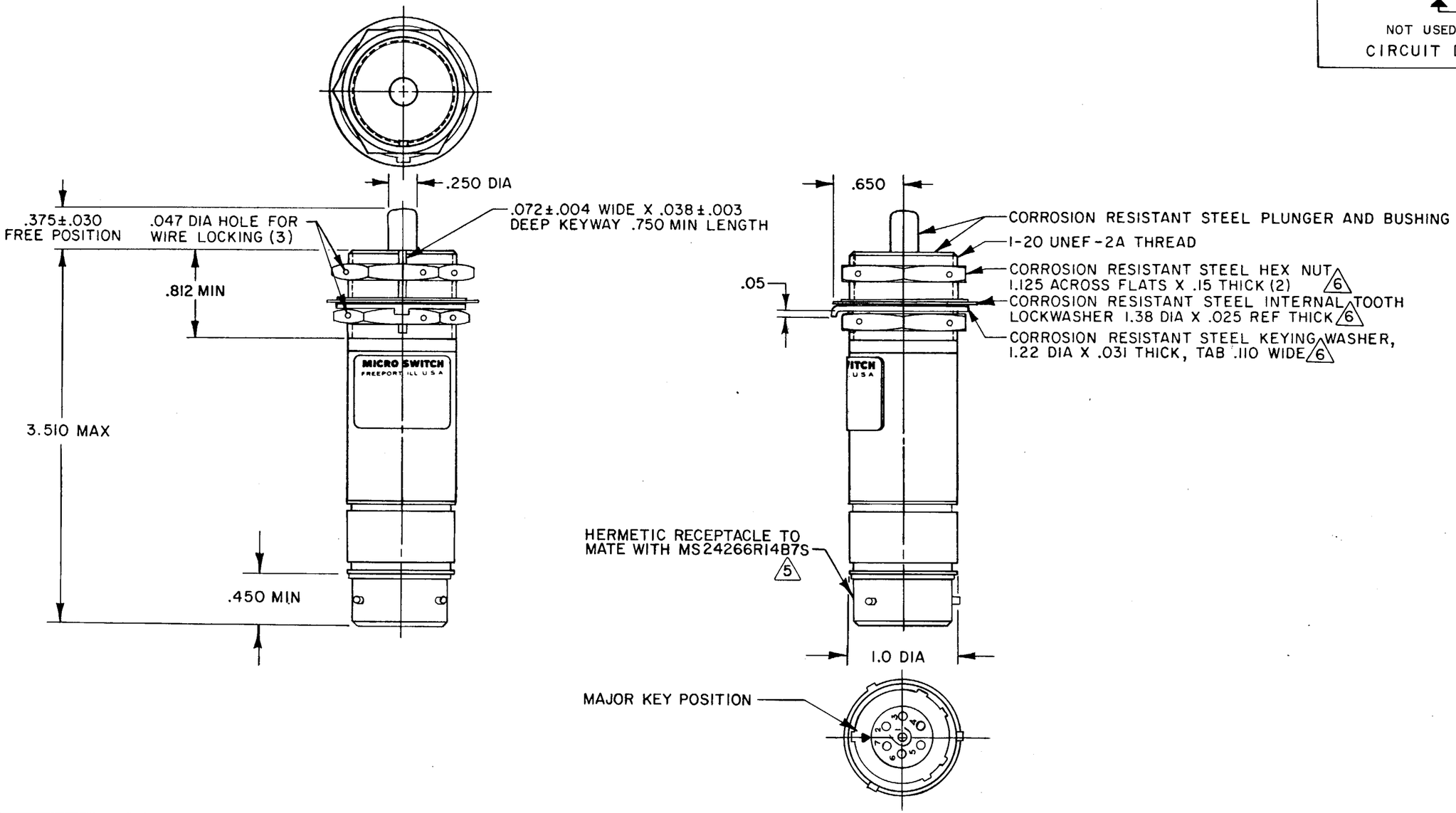

THIS DRAWING COVERS A PROPRIETARY ITEM AND IS THE PROPERTY OF MICRO SWITCH, A DIVISION OF HONEYWELL. THIS DRAWING IS NOT TO BE COPIED OR USED WITHOUT THE APPROVAL OF MICRO SWITCH.

THIRD ANGLE PROJECTION

SCALE FULL
DO NOT SCALE PRINT

TOLERANCES
APPLY TO DESIGN UNITS. CONVERSIONS ARE ONLY FOR REFERENCE. UNLESS NOTED TOLERANCES ARE ±

	DIM. mm	TOL. mm/in	DIM. in	TOL. mm/in
NO PLACES	X	1/64		
ONE PLACE	X.X	0.4/.016	X.X	0.8/.03
TWO PLACES	X.XX	0.15/.006	X.XX	0.38/.015
THREE PLACES			X.XXX	0.13/.005
ANGLES				

DESIGN UNITS SI METRIC ☐ US CUSTOMARY ☒

RAW MATERIAL-COMMERCIAL STANDARD
MICRO SWITCH STANDARDS APPLY
DIMENSIONS ARE TO BE MET BEFORE PROTECTIVE COATINGS ARE APPLIED

WEIGHT 7 OZ MAX

CHARACTERISTICS	
OPERATING FORCE	6-12 LB
FULL OVERTRAVEL FORCE	30 LB MAX
RELEASE FORCE	4 LB MIN
PRETRAVEL	.040 MAX
DIFFERENTIAL TRAVEL	.020 MAX
OVERTRAVEL	.250 MIN

ELECTRICAL DATA

CONTACT ARRANGEMENT
SPDT (2)

LOAD	28 VDC SEA LEVEL	28 VDC 50,000 FT.
RES	5	
IND	3	
MOTOR	4	

NOTES
1 - SWITCH SEALED PER MIL-S-8805 SYMBOL 4
2 - CORROSION RESISTANT STEEL ENCLOSURE
3 - COINCIDENCE OF OPERATING AND RELEASING POINTS: .010 OF PLUNGER TRAVEL
4 - CIRCUIT DIAGRAM, CATALOG LISTING, AND DATE CODE ARE SHOWN ON NAMEPLATE
5 - EITHER SPIRAL OR PIN NUMBERS APPEAR ON RECEPTACLE
6 - HARDWARE MAY BE PACKAGED UNASSEMBLED PER MIL-S-8805

M 1EN202-R
DRAWING NUMBER
RELEASE NO. SR-11121
REPLACES
ISSUE 15
CHECK
REVISIONS
A C044351 PART 7 WJM 30 MAR 79
B C047573 J A P 5 AUG 80
C CO 48159-B T S K 22 APR 81
CHECK
CHECK
CHECK
DRAWN WJM 30 MAR 79
CEB 17 APR 79
FO-52851-A