MICRO SWITCH
a Honeywell Division
FED.MFG.CODE 91929

PACKET

CATALOG LISTING
12PA12 SERIES CHART 1

THIS DRAWING COVERS A PROPRIETARY ITEM AND IS THE PROPERTY OF MICRO SWITCH, A DIVISION OF HONEYWELL. THIS DRAWING IS NOT TO BE COPIED OR USED WITHOUT THE APPROVAL OF MICRO SWITCH.

LISTING	COLOR
12PA12-W	1-17 WHITE
12PA12-R	1-2 RED
12PA12-Y	1-18 YELLOW
12PA12-BK	1-7 BLACK
12PA12-G	1-36 GREEN
12PA12-BL	1-5 BLUE

NOTES
1 - MATERIAL - OPAQUE MODIFIED STYRENE
2 - ACTUATOR BUTTON FOR USE WITH "NR" SERIES SWITCHES
3 - LEGENDED BUTTON TO HAVE -L SUFFIX (EXAMPLE: 12PA12-BK-L)
LEGEND DEFINED PER LEGEND ORDER SHEET

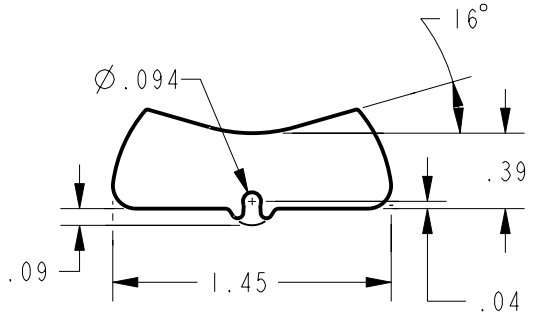

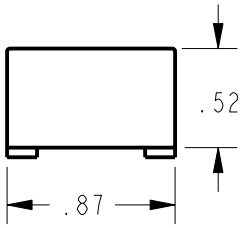

THIRD ANGLE PROJECTION

SCALE FULL

DO NOT SCALE PRINT

UNLESS OTHERWISE SPECIFIED TOLERANCES ARE

ONE PLACE	(.0)	±.030
TWO PLACE	(.00)	±.015
THREE PLACE	(.000)	±.005
ANGLES		±

WEIGHT -

ANSI Y14.5M-1982 APPLIES

12PA12 CHART 1
REPLACES
RELEASE NO. CO-78465
CHECK
CHECK 15NOV01
SAV
CHECK
15NOV01
TSM

CATALOG LISTING 12PA12 SERIES CHART 1
PAGE 1 OF 1
ISSUE 3

REVISIONS
A 204410 TSM 15NOV01

PTC/CAD 2D
DRAWN TSM 15NOV01