MICRO SWITCH
a Honeywell Division
FED.MFG.CODE 91929

SWITCH–BASIC

CATALOG LISTING
12HM12–2

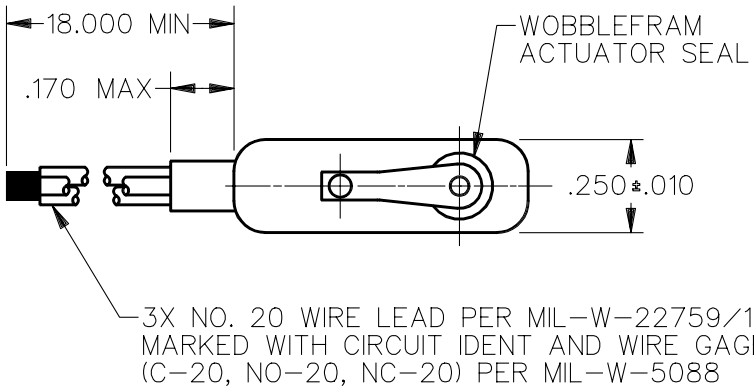

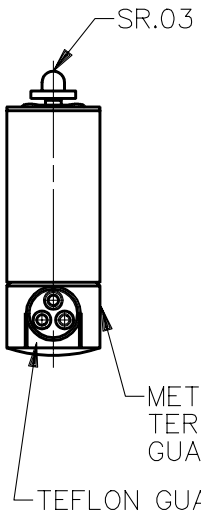

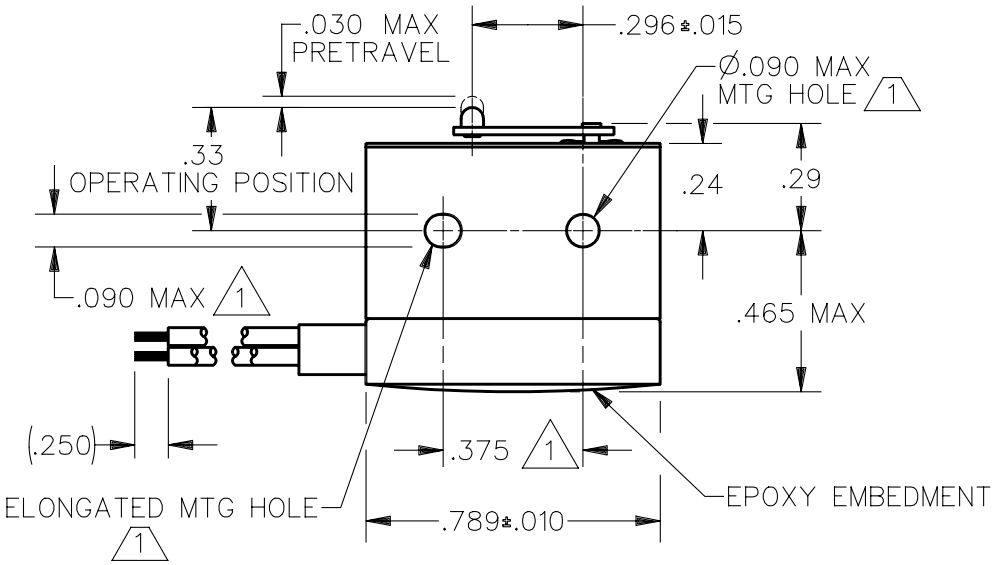

NOTES

1. MOUNTING HOLES WILL ACCEPT PINS OR SCREWS OF Ø .087 MAX ON .375±.002 CENTERS
2 – FOR USE IN TEMPERATURE RANGE –85°F TO +250°F (DOWN TO –300°F IF WIRE LEADS ARE NOT FLEXED)
3 – HERMETICALLY SEALED (METAL–TO–METAL, GLASS–TO–METAL)
4 – ALL EXPOSED PARTS ARE OF CORROSION RESISTANT MATERIALS
5. WEIGHT OF SWITCH ONLY IS 0.22 OZ MAX. WEIGHT OF CONDUCTOR GROUP ONLY IS 0.09 OZ MAX PER FOOT
6 – DO NOT APPLY MORE THAN 1 1/2 INCH LBS OF TORQUE WHEN TIGHTENING MOUNTING SCREWS

ANSI Y14.5M–1982 APPLIES

THIS DRAWING COVERS A PROPRIETARY ITEM AND IS THE PROPERTY OF MICRO SWITCH, A DIVISION OF HONEYWELL. THIS DRAWING IS NOT TO BE COPIED OR USED WITHOUT THE APPROVAL OF MICRO SWITCH.

THIRD ANGLE PROJECTION

CHARACTERISTICS	
OPERATING FORCE	7 OZ MAX
RELEASE FORCE	1 OZ MIN
DIFFERENTIAL TRAVEL	.006 MAX
OVERTRAVEL	.003 MIN

ELECTRICAL DATA

CONTACT ARRANGEMENT
S P D T

LINE VOLTAGE	INDUCTIVE LOAD	RESISTIVE LOAD
28 VDC	1 AMP	3 AMP
115 VAC (400 CYCLE)	1 AMP	3 AMP

SCALE 2 : 1
DO NOT SCALE PRINT

UNLESS OTHERWISE SPECIFIED TOLERANCES ARE

ONE PLACE	(.0)	±.030
TWO PLACE	(.00)	±.015
THREE PLACE	(.000)	±.005
ANGLES		±

WEIGHT 5

CATALOG LISTING 12HM12–2
PAGE 1 OF 1
RELEASE NO. PR–22432
REPLACES
ISSUE 2
CHECK
CHECK
CHECK
CHECK
REVISIONS
A C094220 DLT 24 MAR 99
DRAWN KDR 13 NOV 96
DDM/CAD