REVISION HISTORY			
REV	DESCRIPTION	DATE	APPROVED
A	REVISED LENGTH FOR 15' ASSEMBLY 45059	01/14/00	JBC
B	REDRAWN IN SOLIDWORKS	04/30/02	G.GIBBONS

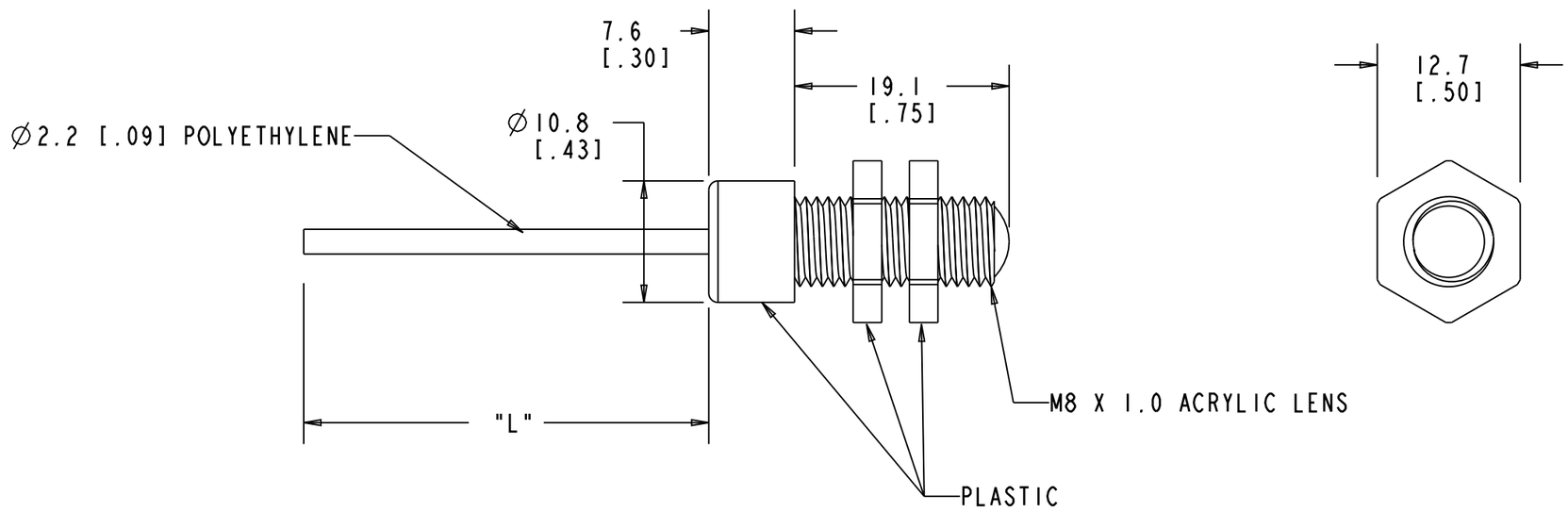

MODEL NO.	"L"	P/N
PIL46U-SL	IEA 4.8" & 13.25"	41524
PIL445U	13716 [540]	56140
PIL460U	20000 [787]	77261
PIL430U	10000 [394]	45096
PIL415U	5000 [196]	45059
PIL46U	2000 [79]	34080

REV.	DESCRIPTION	DATE	INITIAL

Dimensions are Millimeters [inches]
TOLERANCES
(Unless Otherwise Specified)
X = ±0.5mm
X.X = ±0.25
X.XX = ±0.12mm
[X.X = ±.1"]
[.XX = ±.01"]
[.XXX = ±.005"]
ANGLE = ±3°
"L" = 40mm/Meter
[.5"/Foot]

BANNER ENGINEERING Corp.
9717 10th Ave. North
Minneapolis, MN 55441
Tel # 763-544-3164
Fax # 763-544-3573
www.bannerengineering.com

This drawing is the properly of BANNER ENGINEERING Corp. and is proprietary in general and in detail. Its contents shall not be revealed to outside parties without the written consent of BANNER.

FIBER PIL46U ASSY

PLASTIC FIBEROPTIC ASSEMBLY & MOD'S

7-17-96	1 OF 1	34080	B