3M™ Scotchlok™ Copper Lugs 31100 Series, Two Hole, Long-Barrel, up to 35 kV

The 3M™ Scotchlok™ Copper Lugs 31100 Series are a family of two hole lugs from 4 AWG–1000 kcmil designed for terminating copper conductors. Each lug is tin plated to resist corrosion and can be installed with standard industry tools. Chamfered ends ensure ease of conductor insertion.

O.D. = Outside Diameter; (B) = Barrel Length; (C) = Center of Hole to End of Pad; (C') = Center of Hole to Center of Hole; (L) = Length; (P) = Pad Length; (W) = Pad Width

Barrel Style	Long Barrel
No. of Holes	Two Hole
Lug Base Metal	Copper
For use with	Copper Conductor Only
Dimension (C)	0.63" (16,0 mm)
Dimension (C')	1.75" (44,5 mm)
RoHS 2011/65/EU	Yes
***Agency Approval**	* UL

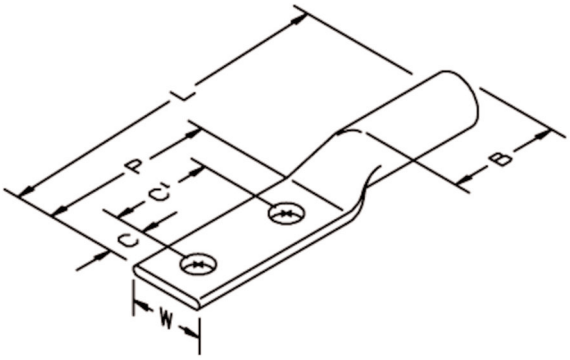

Order No.	UPC	Wire & Stud Size	Color	O.D.	(B)	(L)	(P)	(W)	Min/Case Qty
31122	051138-52496	4 AWG 1/2"	Gray	0.34" (8,6 mm)	0.93" (23,5 mm)	4.19" (106,4 mm)	3.00" (76,2 mm)	0.66" (16,7 mm)	25
31125	051138-52497	2 AWG 1/2"	Brown	0.42" (10,6 mm)	1.25" (31,8 mm)	4.85" (123,2 mm)	3.00" (76,2 mm)	0.63" (16,0 mm)	25
31129	051138-52498	1 AWG 1/2"	Green	0.42" (10,6 mm)	1.25" (31,8 mm)	4.85" (123,2 mm)	3.00" (76,2 mm)	0.69" (17,5 mm)	10
31130	051138-52499	1/0 AWG 1/2"	Pink	0.51" (13,0 mm)	1.38" (31,5 mm)	4.98" (126,5 mm)	3.00" (76,2 mm)	0.75" (19,0 mm)	10
31137	051138-69245	2/0 AWG 1/2"	Black	0.56" (14,2 mm)	1.50" (38,1 mm)	5.03" (127,8 mm)	3.00" (76,2 mm)	0.81" (20,7 mm)	10
31141	051138-69246	3/0 AWG 1/2"	Orange	0.62" (15,8 mm)	1.44" (36,5 mm)	5.13" (130,3 mm)	3.00" (76,2 mm)	0.91" (23,0 mm)	10
31145*	054007-12600	4/0 AWG 1/2"	Purple	0.68" (17,4 mm)	1.56" (39,7 mm)	5.16" (131,1 mm)	3.00" (76,2 mm)	1.00" (25,4 mm)	10
31149*	054007-12626	250 kcmil 1/2"	Yellow	0.75" (19,1 mm)	1.56" (39,7 mm)	5.31" (134,9 mm)	3.00" (76,2 mm)	1.13" (28,6 mm)	10
31153*	054007-12642	300 kcmil 1/2"	White	0.81" (20,6 mm)	1.94" (49,2 mm)	5.75" (146,1 mm)	3.00" (76,2 mm)	1.22" (31,0 mm)	10
31156*	054007-12667	350 kcmil 1/2"	Red	0.87" (22,1 mm)	1.94" (49,2 mm)	5.75" (146,1 mm)	3.00" (76,2 mm)	1.31" (33,4 mm)	10
31160*	054007-11979	400 kcmil 1/2"	Blue	0.95" (24,1 mm)	2.12" (53,8 mm)	6.00" (152,4 mm)	3.00" (76,2 mm)	1.41" (35,8 mm)	10
31166*	054007-12691	500 kcmil 1/2"	Brown	1.06" (26,9 mm)	2.19" (55,6 mm)	6.16" (156,4 mm)	3.00" (76,2 mm)	1.53" (38,9 mm)	10
31168*	054007-11981	600 kcmil 1/2"	Green	1.18" (30,1 mm)	2.62" (66,5 mm)	6.72" (170,6 mm)	3.00" (76,2 mm)	1.69" (42,9 mm)	6
31172*	054007-12709	750 kcmil 1/2"	Black	1.29" (33,0 mm)	2.81" (71,5 mm)	7.00" (177,8 mm)	3.00" (76,2 mm)	1.72" (43,7 mm)	6
31178*	054007-00907	1000 kcmil 1/2"	White	1.50" (38,1 mm)	2.94" (74,6 mm)	7.28" (184,9 mm)	3.00" (76,2 mm)	1.72" (43,7 mm)	6